Rexroth
Bosch Group

Variable displacement pump A10VSO

RE 92 712/02.94 **1**/16
Replaces: 01.91

open circuit

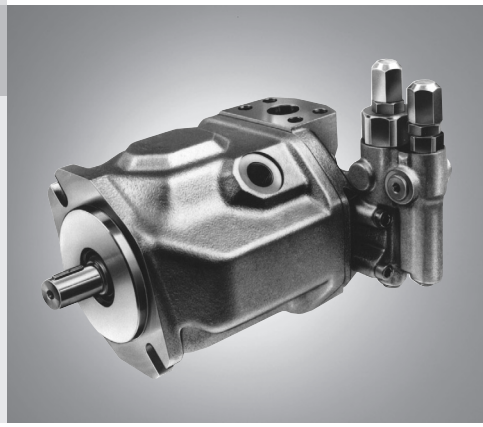

Size 18
Series 31
Nominal pressure 280 bar
Peak pressure 350 bar

Contents

Ordering code	2
Hydraulic fluid	3
Technical data	4
Installation notes, noise characteristics	5
Unit dimensions size 18, PA12	6
Unit dimensions size 18, UC62	7
Pressure controller DR	8
Pressure controller, remote controlled DRG	9
Pressure flow controller DFR / DFR1	10
Unit dimensions DFR / DFR1	11
Pressure and flow controller, electronic DFE1	12
Unit dimensions DFE1	13
Through drive, unit dimensions combination pumps	14
Unit dimensions through drives K01 and K52	15

Features

- Variable displacement axial piston pump A10VSO in swashplate construction is designed for hydrostatic transmissions in open circuits.
- It can be used in mobile and industrial applications.
- Flow is proportional to the drive speed and the displacement. By adjusting the position of the swashplate it is possible to steplessly vary the flow.
- ISO or SAE mounting flange
- SAE flanged connections with metric or UNC fixing threads
- 2 case drain ports
- Good suction characteristics
- Permissible continuous operating pressure 280 bar
- Low noise level
- Long service life
- Axial and radial loading of drive shaft possible
- Low specific weight
- Short control times
- Through drive for multi-circuit system possible

A10VSO size 28 ... 140
see RE 92711

Ordering code

A10VS	O	18		/	31		–					

Hydraulic fluid

Mineral oil (without short code)

prefered program
with short delivery times
type list see page 15

Axial piston unit

Swashplate design, variable, industrial range Nominal pressure 280 bar, peak pressure 350 bar	A10VS

Mode of operation

Pump, open circuit	O

Size

≙ Flow $V_{g\,max}$ (cm³)	18

Control device

Pressure controller	DR		●	DR
	DR	G	●	DRG
remote controlled				
Pressure and flow controller	DFR		●	DFR
	DFR	1	●	DFR1
X-channel plugged				
Pressure and flow controller, electronic	DFE1		●	DFE1

Series

	31

Direction of Rotation

Viewed on drive shaft	clockwise	R
	anti-clockwise	L

Seals

Perbunan (shaft sealing ring in Viton)	P
Viton	V

Shaft end

		DIN	SAE	
Parallel with key	DIN 6885	●		P
Parallel with key	19-1 (SAE A-B)		●	K
Splined	19-4 (SAE A-B, 3/4")		●	S
Splined	16-4 (SAE A, 5/8", not suitable for through drive)		●	U

Mounting flange

ISO 2-hole	●		A
SAE 2-hole		●	C

Service line connections

Pressure port B Suction port S	SAE ports on opposite sides metric fixing threads	12
Pressure port B Suction port S	SAE ports on opposite sides UNC fixing threads	62

Through drive

Without through drive			N00
With through drive for building on axial piston unit or gear pump			
Mounting flange	Shaft/coupling	for mounting:	
82-2 (SAE A)	Splined shaft 16-4 (SAE A; 5/8")	G2	K01
82-2 (SAE A)	Splined shaft 19-4 (SAE A-B; 3/4")	A10VSO 18	K52

● = available
○ = in preparation
– = not available

Hydraulic fluid

For detailed information on the range of fluids and their application conditions please see our data sheets RE 90220 (mineral oil), RE 90221 (environmentally acceptable hydraulic fluids) and RE 90223 (HF hydraulic fluids). When operating with environmentally acceptable hydraulic fluids and HF fluids it may be necessary to consider certain modifications to the technical data; please contact our technical department. Operation with Skydrol hydraulic fluid strictly subject to consultation.

Operating viscosity range

In the interests of ensuring optimum efficiency and service life we recommend that the operating viscosity (at operating temperature) is selected from within the range

ν_{opt} = opt. operating viscosity 16...36 mm²/s

with reference to the tank temperature (open circuits).

Viscosity limits

The following values apply in respect of viscosity limits:

ν_{min} = 10 mm²/s
short-term at maximum permissible drain temperature of 90° C.

ν_{max} = 1000 mm²/s

Temperature range (cf: selection diagram)

t_{min} = – 25° C

t_{max} = + 90° C

Selection diagram

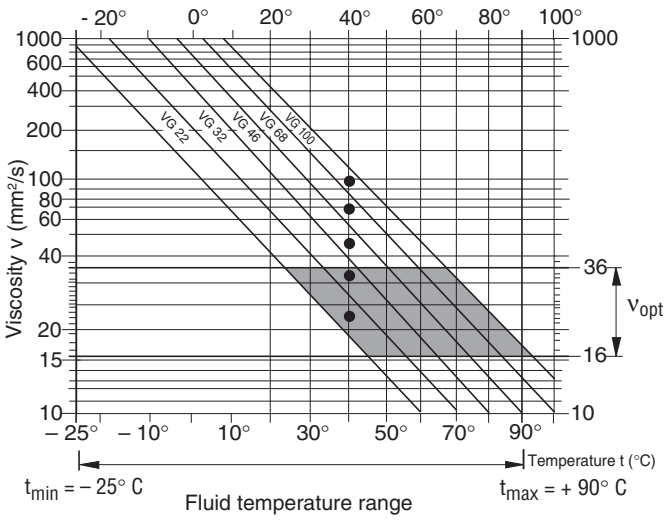

Notes on hydraulic fluid selection

In order to select the correct fluid it is necessary to know the operating temperature in the tank (open loop) in relation to the ambient temperature.

The hydraulic fluid should be selected so that within the operating temperature range the operating viscosity lies within the optimum range (ν_{opt}) - see shaded area of selection diagram. We recommend that the highest possible viscosity range should be chosen in each case.

Example: At an ambient temperature of X° C the operating temperature in the tank is 60°C. Within the operating viscosity range (ν_{opt}; shaded area) this corresponds to viscosity classes VG 46 or VG 68. VG 68 should be selected.

Important: The case drain oil temperature is influenced by pressure and pump speed and is always higher than the tank temperature. However, at no point in the installation may the temperature exceed 90° C.

Please consult us if compliance with the above conditions is not possible due to extreme operating parameters or high ambient temperatures.

Fluid filtration

Correct functioning of the unit calls for a minimum level of cleanliness

to NAS, 1638 class 9
to SAE, ASTM, AIA or
to ISO/DIS 4406 18/15

This can be achieved, for example, using filter element type ...D 020...(see RE 31278).

This gives a filter quotient of

$\beta_{20} \geq 100.$

Mechanical flow limiting

Mechanical flow limiting **on the version without through drive it is standard, it is not possible with through drive**

Q_{max}: Setting range $V_{g\,max}$ to 50% $V_{g\,max}$

Combination pumps

1. If a **second Brueninghaus pump is fitted in the factory,** both ordering codes should be joined with **"+"** .

Typical order format: **A10VSO 18DFR/31R-PSC62K52 + A10VSO 18DFR/31R-PSC62N00**

2. If a **gear pump is fitted in the factory** please consult us (RE 90139 in preparation).

Technical data

(suitable for operation on mineral oil;
for **water based fluids see RE 90223** and
environmentally acceptable fluids see RE 90221)

Operating pressure range - Inlet side
Absolute pressure at port S

$p_{abs\ min}$ ——— 0,8 bar
$p_{abs\ max}$ ——— 30 bar

Operating pressure range - Outlet side
Pressure at port B
Nominal pressure p_N ——— 280 bar
Peak pressure p_{max} ——— 350 bar
(Pressure information to DIN 24312)
Applications at intermittent operating pressures of up to 315 bar at 10% duty are permissible.

Case drain pressure
Maximum permissible pressure of case drain fluid (at port L, L_1):
Maximum 0.5 bar higher than inlet pressure at port S,but no higher than 2 bar absolute.

Through flow direction
S to B.

Determination of inlet pressure p_{abs} at suction port S or reduction in output flow for increasing speed

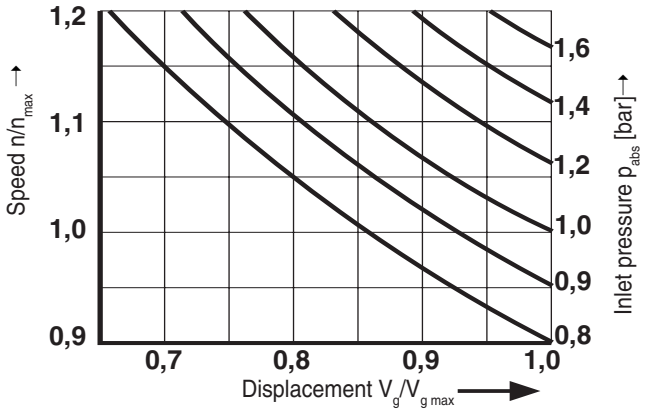

Table of values (theoretical values, rounded off without taking into consideration η_{mh} and η_v)

Size				18
Displacement		$V_{g\ max}$	cm^3	18
Max. speed[1])	at $V_{g\ max}$	$n_{o\ max}$	rpm	3300
Max. permissible velocity (speed limit) on increase in inlet pressure p_{abs} or $V_g < V_{g\ max}$		$n_{o\ max\ zul}$	rpm	3900
Max. flow	at $n_{o\ max}$	$Q_{o\ max}$	L/min	59,4
	at n_E = 1500 rpm		L/min	27
Max.power (Δp = 280 bar)	at $n_{o\ max}$	$P_{o\ max}$	kW	27,7
	at n_E = 1500 rpm		kW	12,6
Max. torque (Δp = 280 bar)	at $V_{g\ max}$	M_{max}	Nm	80,1
Torque (Δp = 100 bar)	at $V_{g\ max}$	M	Nm	28,6
Moment of inertia about drive axis		J	kgm^2	0,00093
Fill capacity			L	0,4
Weight without (oil fill)		m	kg	12
Permissible shaft loading Max. permissible axial force		$F_{ax\ max}$	N	700
Max. permissible radial force [2])		$F_{q\ max}$	N	350

[1]) These values are valid for an absolute pressure of 1 bar at suction port S. By reducing the output flow or increasing the input pressure the speed can be increased as shown in the diagram.

[2]) For higher radial forces please consult us.

Application of forces

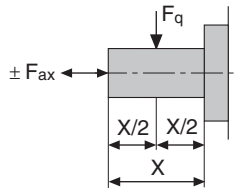

Determination of size

Flow $Q = \dfrac{V_g \cdot n \cdot \eta_v}{1000}$ [L/min]

Drive torque $M = \dfrac{1{,}59 \cdot V_g \cdot \Delta p}{100 \cdot \eta_{mh}}$ [Nm]

Drive capacity $P = \dfrac{2\pi \cdot M \cdot n}{60000} = \dfrac{M \cdot n}{9549} = \dfrac{Q \cdot \Delta p}{600 \cdot \eta_t}$ [kW]

V_g = geometric displacement [cm^3] per revolution
Δp = Differential pressure [bar]
n = Speed [rpm]
η_v = Volumetric efficiency
η_{mh} = Mechanical hydraulic efficiency
η_t = Overall efficiency ($\eta_t = \eta_v \cdot \eta_{mh}$)

Installation notes

The installation position is optional. The pump housing must be filled with hydraulic fluid during commissioning and stay full when operating. In order to ensure the lowest possible noise values all connections (suction, pressure and drain connections) must be flexible.

Avoid a non-return valve in the drain line. In exceptional cases this may be permissible, but only after prior consultation with us.

For detailed installation notes and commissioning information see RE 90400 (in prep.)

Characteristic curves for pump with pressure controller DR

Noise levels

Measured in an anechoic chamber
Distance from microphone to pump = 1 m
Measuring error: ± 2 dB (A)
(Fluid: ISO VG 46 DIN 51519, t = 50° C)

Size 18

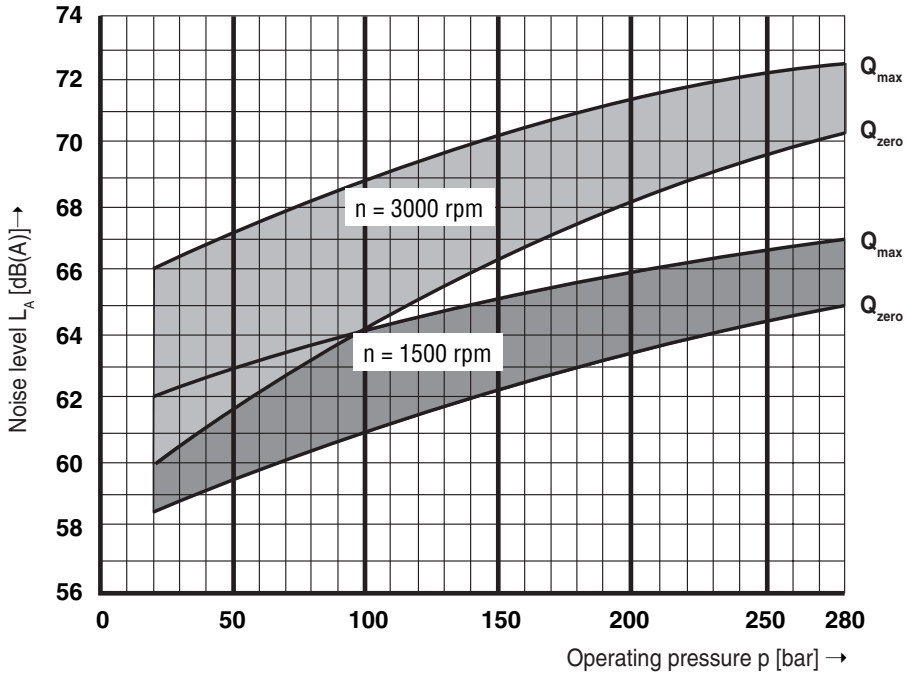

Drive power and output flow

(Fluid:
Hydraulic oil ISO VG 46 DIN 51519, t = 50° C)

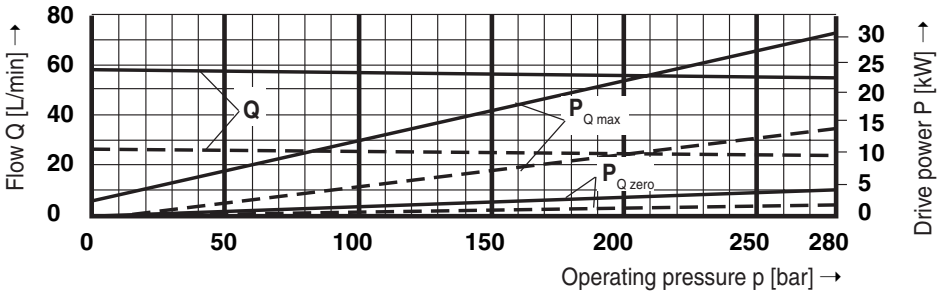

Size 18

– – – – n = 1500 rpm
▬▬ n = 3300 rpm

Before finalising your design, please request a certified drawing.
All rights reserved, subject to revision

Unit dimensions size 18

ISO version with keyed shaft **PA12**,
Through drive version N**00** (without through drive)
not including control

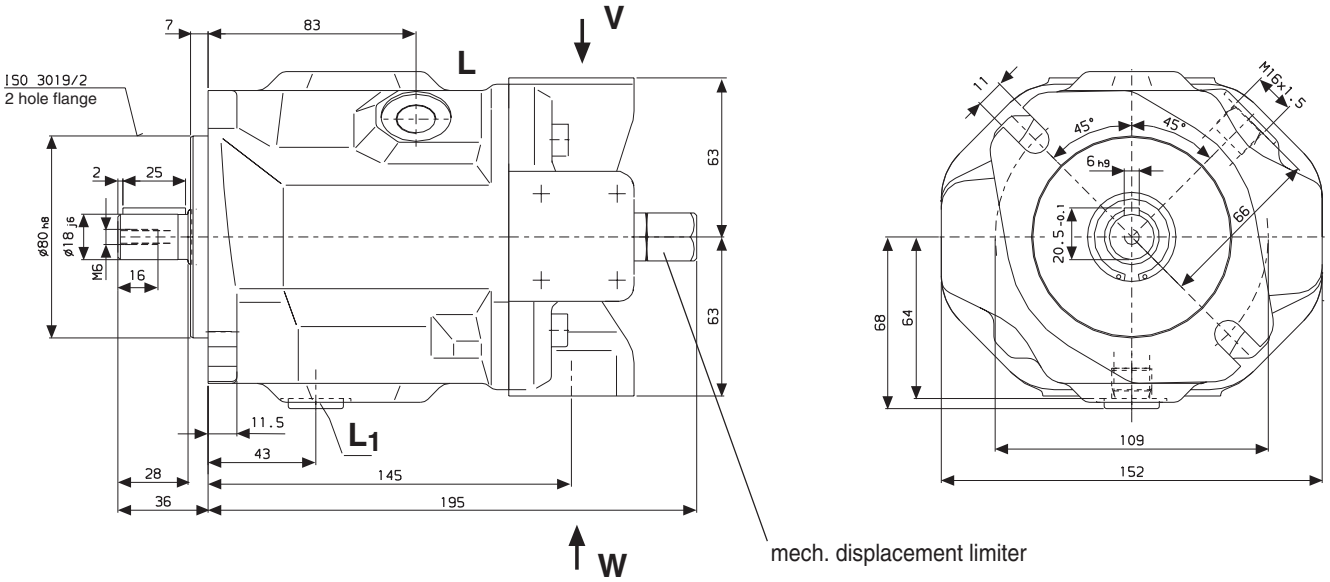

View W

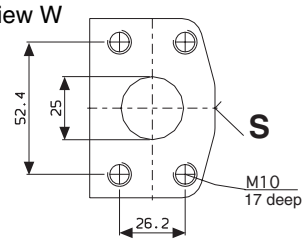

View V

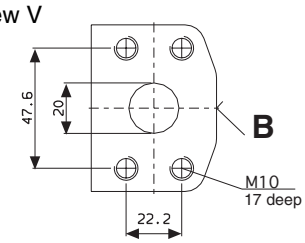

B	Pressure port	SAE 3/4"	(Standard pressure series)
S	Suction port	SAE 1"	(Standard pressure series)
L/L_1	Case drain ports	M16x1,5	(L_1 plugged at factory)

Before finalising your design, please request a certified drawing.
All rights reserved, subject to revision

Unit dimensions size 18

SAE version with SAE splined shaft **UC62**,
Through drive version N**00** (without through drive)
not including control

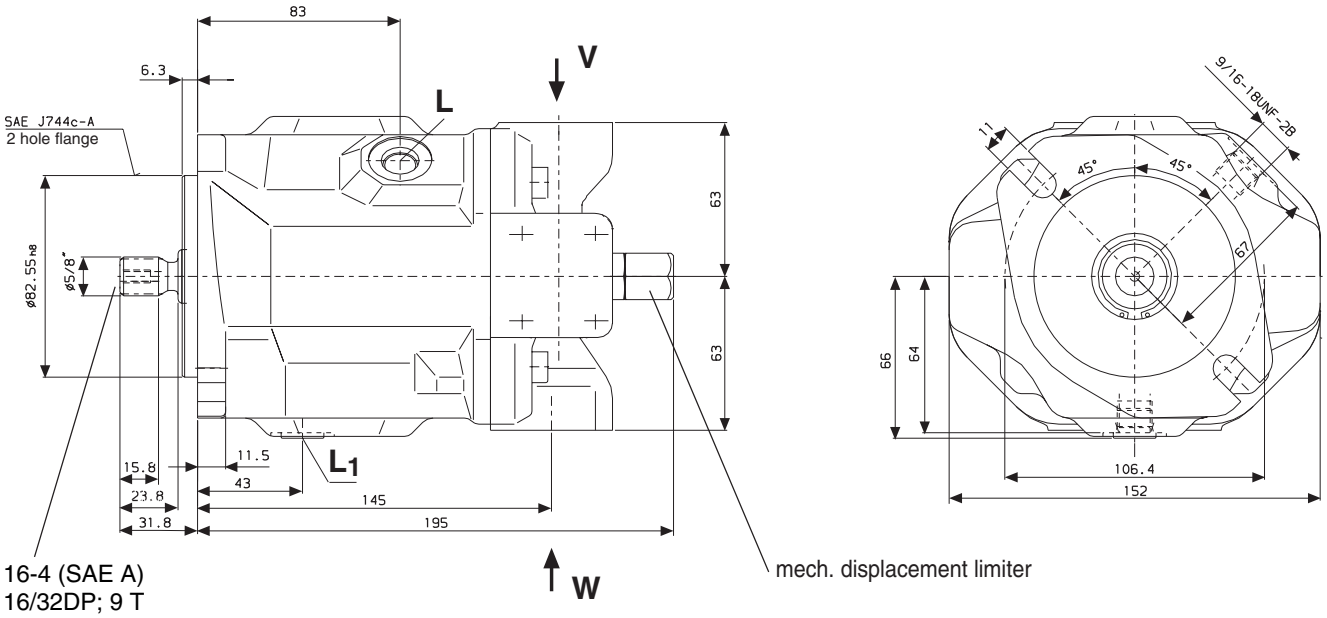

View W View V

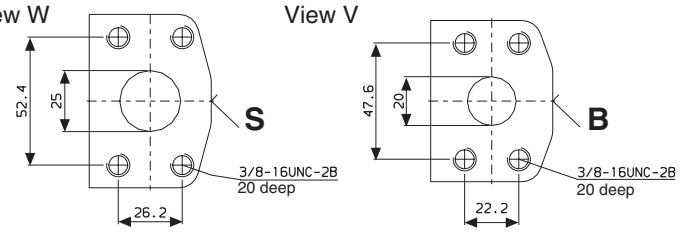

Shaft end "**S**"

19-4 (SAE A-B)
16/32DP; 11 T

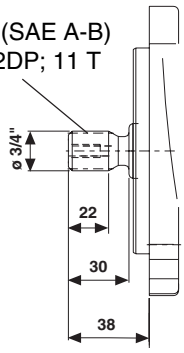

Shaft end "**K**"

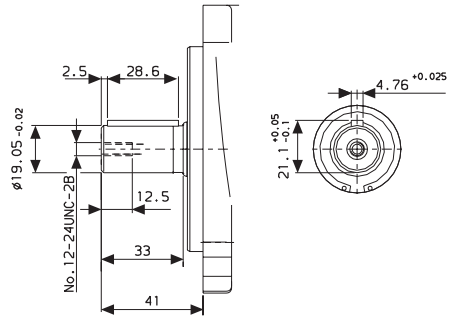

B	Pressure port	SAE 3/4"	(Standard pressure series)
S	Suction port	SAE 1"	(Standard pressure series)
L/L_1	Case drain ports	9/16-18 UNF-2B	(L_1 plugged at factory)

Before finalising your design, please request a certified drawing.
All rights reserved, subject to revision

DR Pressure controller

The constant pressure control serves to maintain a constant pressure in a hydraulic system within the control range of the pump. The pump therefore supplies only the amount of hydraulic fluid required by the system. Pressure may be steplessly set at the pilot valve.

Static curve
(at n_1 = 1500 rpm; t_{oil} = 50° C)

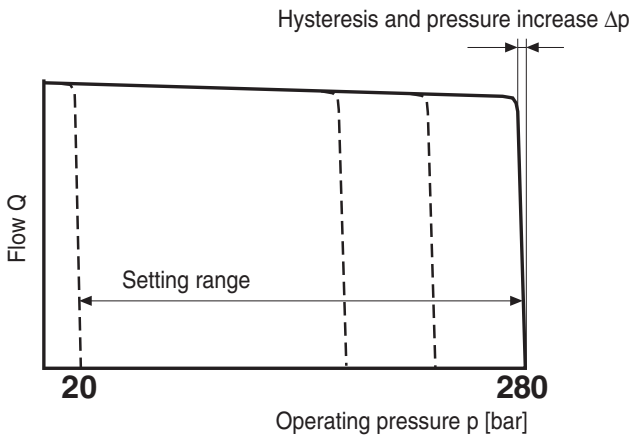

Dynamic Curves
The operating curves are measured mean values taken under test conditions with the unit mounted inside the tank.
Conditions: n = 1500 rpm
t_{oil} = 50° C
Pressure cut-off at 350 bar
Load steps were obtained by suddenly opening and closing the pressure line with a pressure relief valve as load valve 1 m from the mounting flange of the axial piston unit.

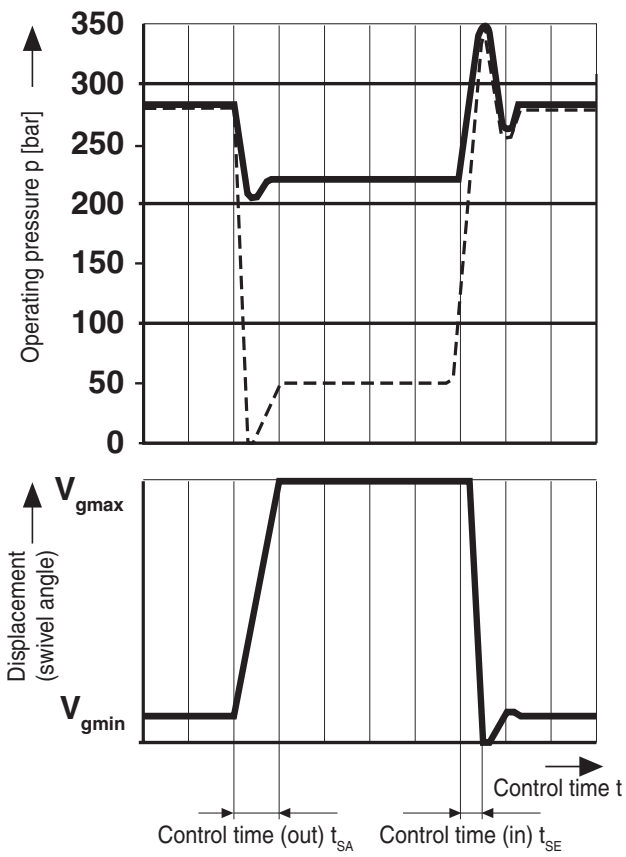

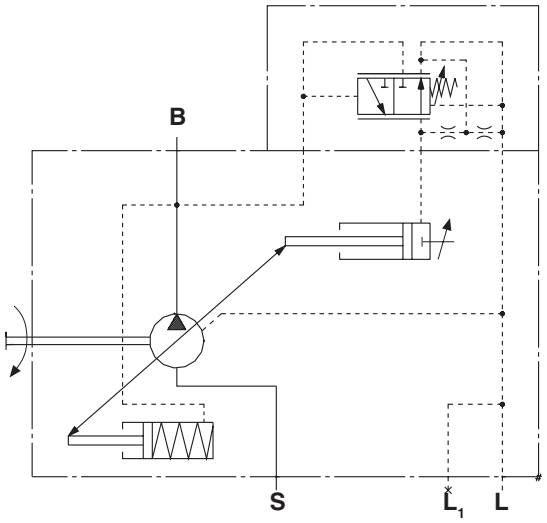

Ports

B	Pressure port
S	Suction port
L, L_1	Case drain ports(L_1 plugged)

Controller data

Hysteresis and pressure increase Δp _____ max. 4 bar
Pilot oil requirement _____ max. approx. 3 L/min
Loss of flow at Q_{max} see page 5.

Control time

Size	t_{SA} (ms) at 50 bar	t_{SA} (ms) at 220 bar	t_{SE} (ms) zero stroke 280 bar
18	50	25	20

Unit dimensions

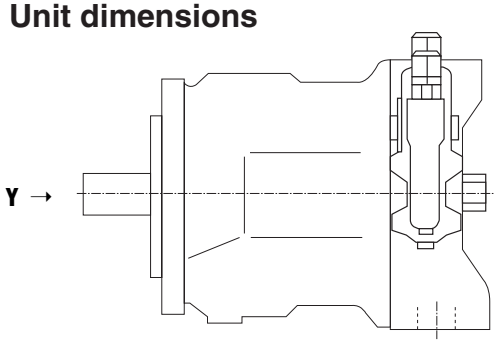

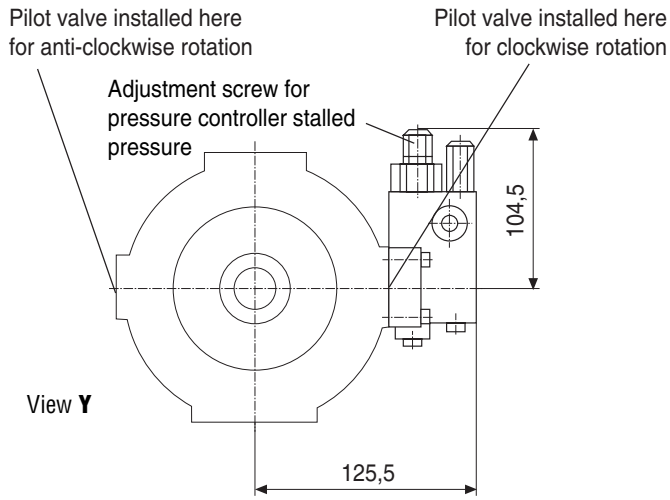

DFR valve, flow controller blocked and not tested

Before finalising your design, please request a certified drawing.
All rights reserved, subject to revision

DRG Pressure controller, remote controlled

Function and equipment as for DR.

A pressure relief valve can be connected here at port X. This is not included in the items supplied for the DRG control

The standard setting for differential pressure at the pilot valve is 20 bar. The amount of pilot oil required is approx. 1.5 L/min. If a different setting is required (range 10-22 bar) please indicate in clear text.

We recommend the following as a separate pressure relief valve:
DBDH 6 (hydraulic) to RE 25402,
DBEC-3X (electrical) to RE 29142 or
DBETR -SO 381 w. nozzle ø 0.8 in P (electrical) to RE 29166.

Max. line length should not exceed 2 m.

Static curve
(at n_1 = 1500 rpm; t_{oil} = 50° C)

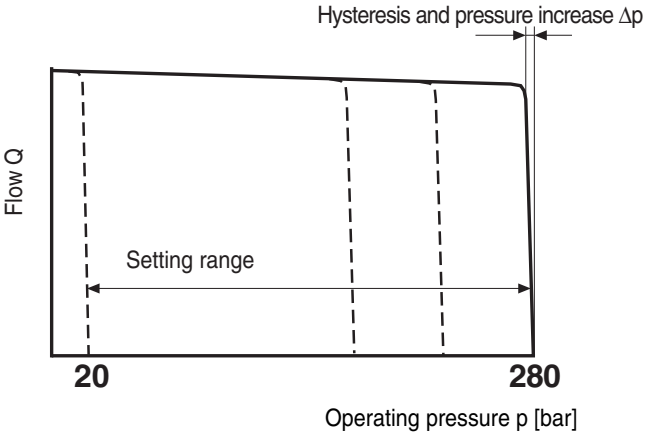

Controller data

Hysteresis and pressure increase Δp _____ max. 4 bar

Pilot oil requirement _____ approx. 4.5 L/min

Loss of flow at Q_{max} see page 5.

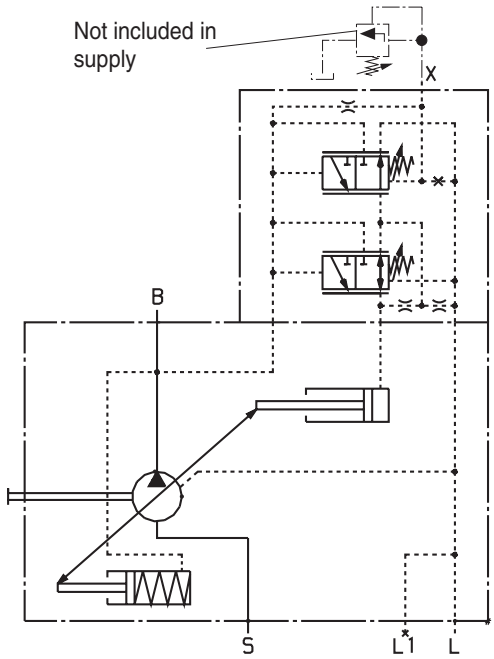

Ports

B	Pressure port
S	Suction port
L, L_1	Case drain ports (L_1 plugged)
X	Pilot pressure port

Unit dimensions

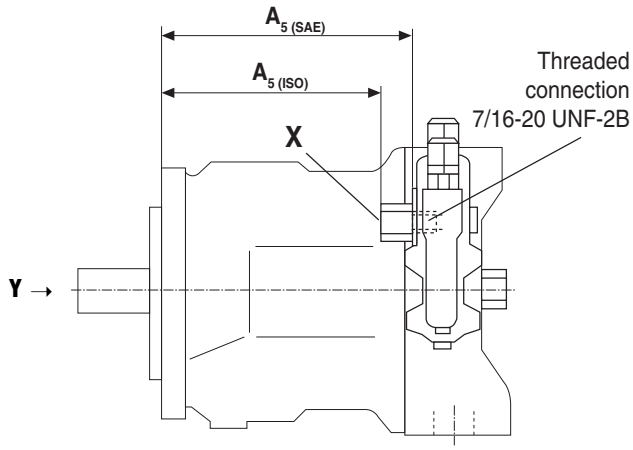

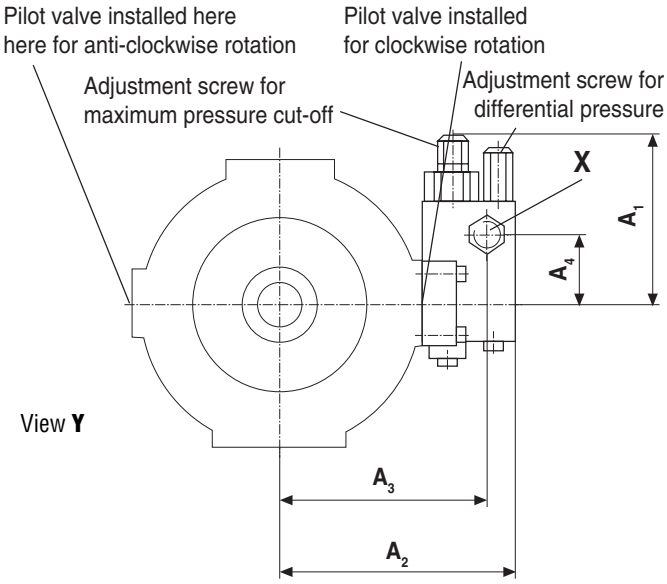

Size	A_1	A_2	A_3	A_4	A_5	Port X
18_{ISO}	104,5	125,5	109	40	109	M14x1,5;12 deep
18_{SAE}	104,5	125,5	109	40	130	7/16-20 UNF-2B;10 deep

DFR/DFR1 Pressure - Flow controller

In addition to operation of the pressure controller it is also possible to set the pump flow by means of differential pressure at the actuator (e.g. an orifice).
In model DFR1 the X port is plugged.

Static curve
(at n_1 = 1500 rpm, t_{oil} = 50° C)

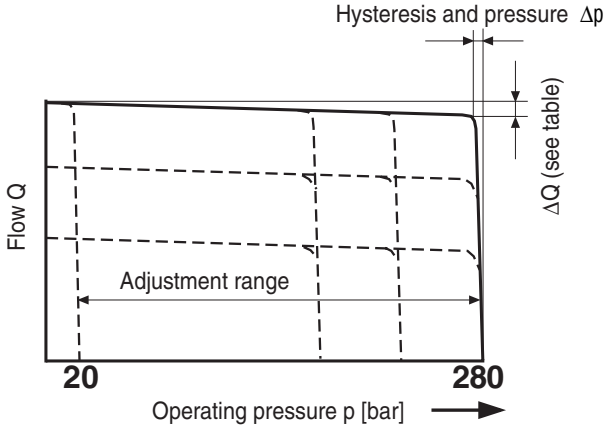

Static curve at variable speed

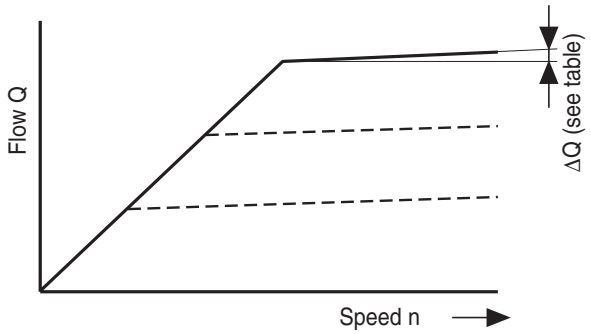

Dynamic flow control curve
The curves are mean values measured under test conditions, pump in tank

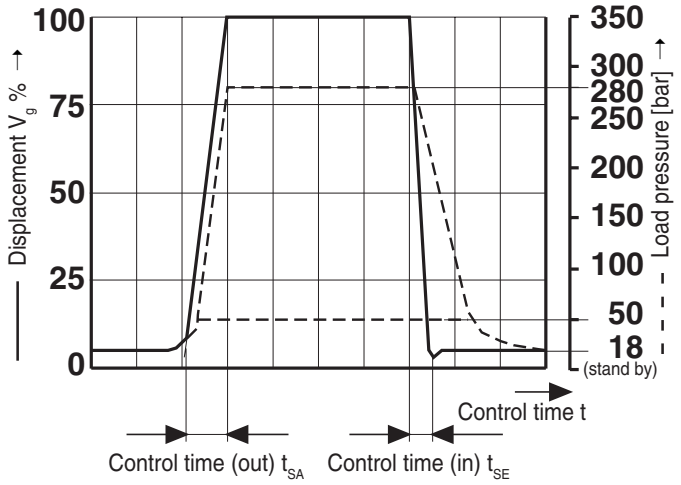

Control time

Size	t_{SA} (ms) stand by-280 bar	t_{SA} (ms) 280 bar-stand by	t_{SE} (ms) 50 bar-stand by
18	40	15	40

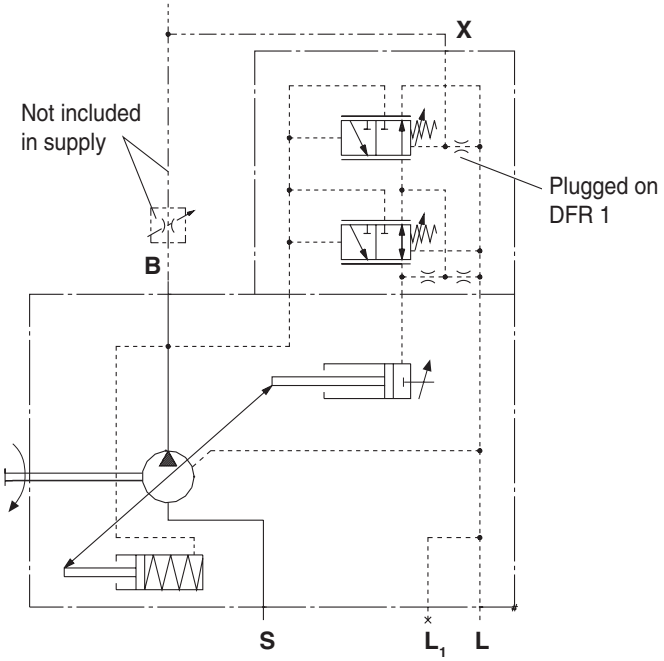

Connections

B	Pressure port
S	Suction port
L, L1	Case drain ports (L1 plugged)
X	Pilot pressure port

Differential pressure Δp:
Adjustable between 10 and 22 bar (higher values on request).
Standard setting: 14 bar. If another setting is required please state in clear text.
When pressure is relieved on port X to tank a stalled pressure of p = 18 ± 2 bar ("stand by") is set.

Controller data
Max. flow deviation (hysteresis and increase) measured at drive speed n = 1500 rpm

Size		18
ΔQ_{max}	L/min	0,9

Hysteresis and pressure increase Δp _____ max. 5 bar
Pilot oil requirement DFR _____ max. approx. 3 ... 4,5 L/min
Pilot oil requirement DFR1 _____ max. approx. 3 L/min
Loss of flow at at Q_{max} see page 5.

Unit dimensions

Before finalising your design, please request a certified drawing.
All rights reserved, subject to revision

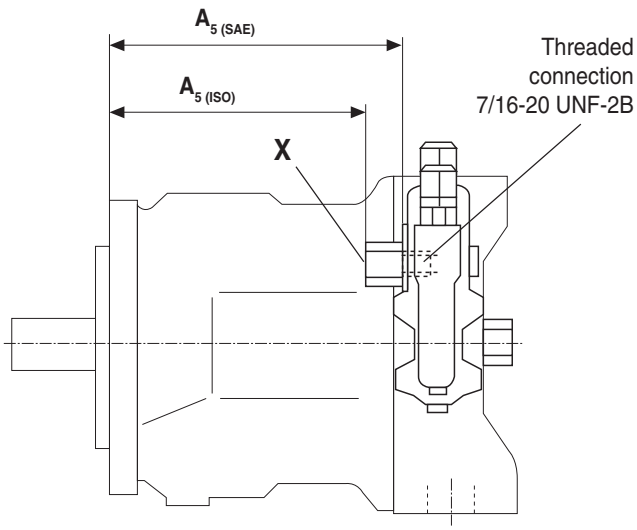

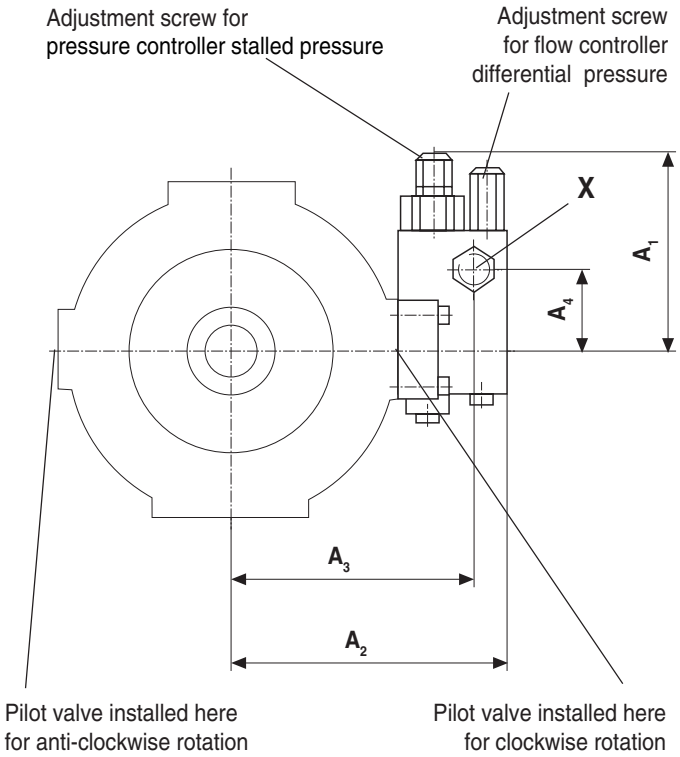

Size	A_1	A_2	A_3	A_4	A_5	Port X
18_{ISO}	104,5	125,5	109	40	109	M14x1,5;12 deep
18_{SAE}	104,5	125,5	109	40	130	7/16-20 UNF-2B;10 deep

DFE1 Pressure and flow controller, electronic

Pressure and flow to the pump are controlled by an electrically operated proportional valve. Flow control is via the variable pump swivel angle wthout compensation for drive speed variations (e.g. due to the diesel motor). Pump pressure and pump position are signalled via a pressure sensor and inductive positional transducer to the amplifier card which is required to operate the closed loop control.

DFE1 model pump is suitable for operation with analogue amplifier card VT 5041.
The amplifier card and the pressure sensor should be ordered separately.

For safety reasons an additional pressure relief valve should be installed in addition to the pump pressure controller. This is to safeguard the maximum permissible operating pressure.

For further information and some typical applications see RE 67016 and RE 98090.

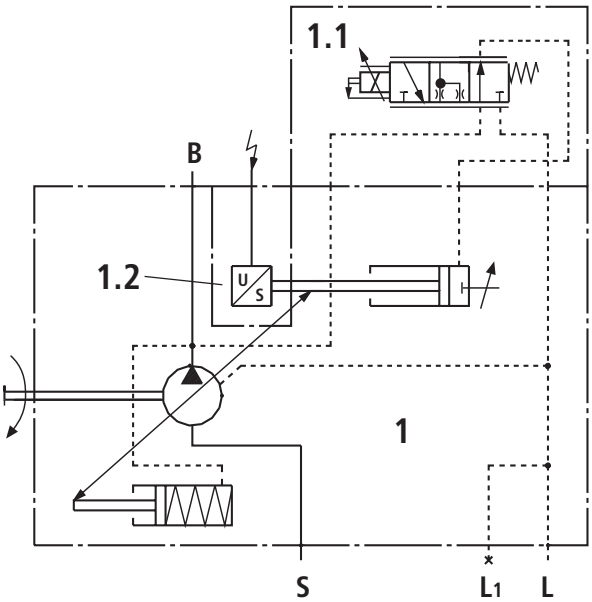

Static curves

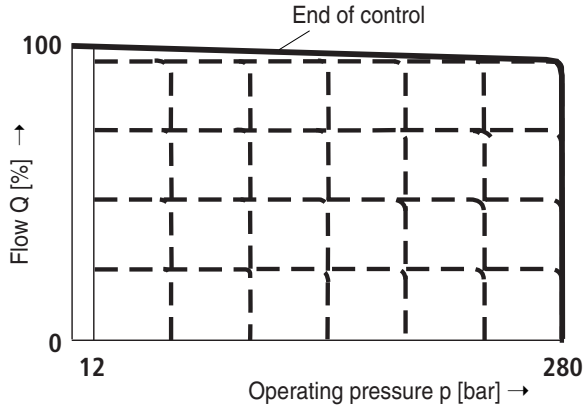

Ports

B	Pressure port
S	Suction port
L, L1	Case drain ports (L1 plugged)

Components

1 A10VSO with hydraulic setting device
1.1 Proportional valve
1.2 Inductive positional transducer
Pressure sensor and control electronics are loose items (please order separately to RE 67016)

Control data

Hysteresis _____ < 1% of $V_{g\,max}$
Repeatability _____ < 1%
Pilot oil requirement _____ max. approx. 2.5 L/min
Loss of flow at Q_{max} see Page 5.

Dynamic curves

Pressure stepped signal value e.g. 40 bar – 120 bar
DFE1 45 with compression oil volume (5L)

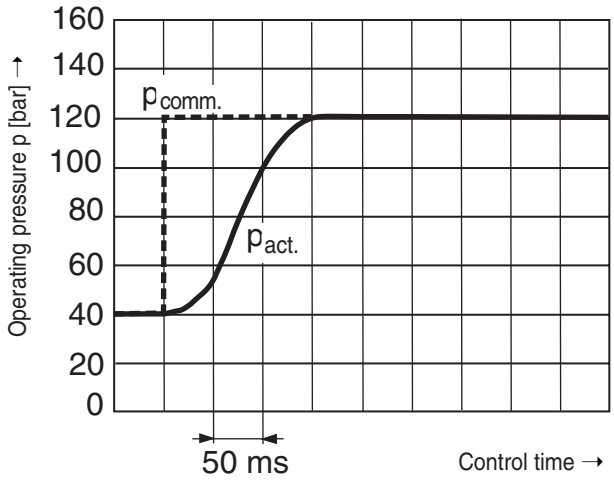

Pressure stepped signal value 120 bar – 40 bar
DFE1 45 with compression oil volume (5L)

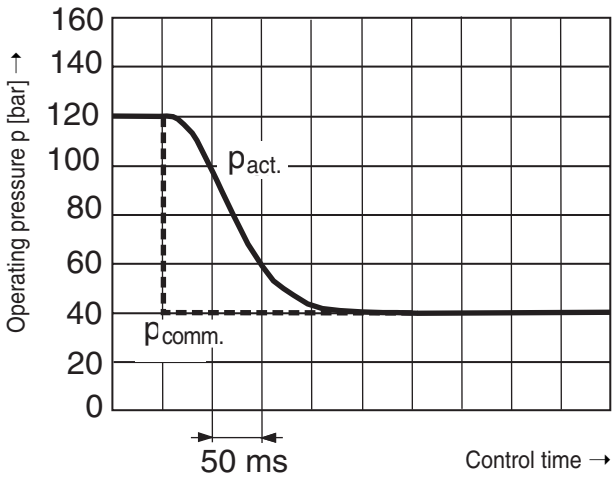

Before finalising your design, please request a certified drawing.
All rights reserved, subject to revision

Unit dimensions
DFE1 pressure and flow controller, electronic

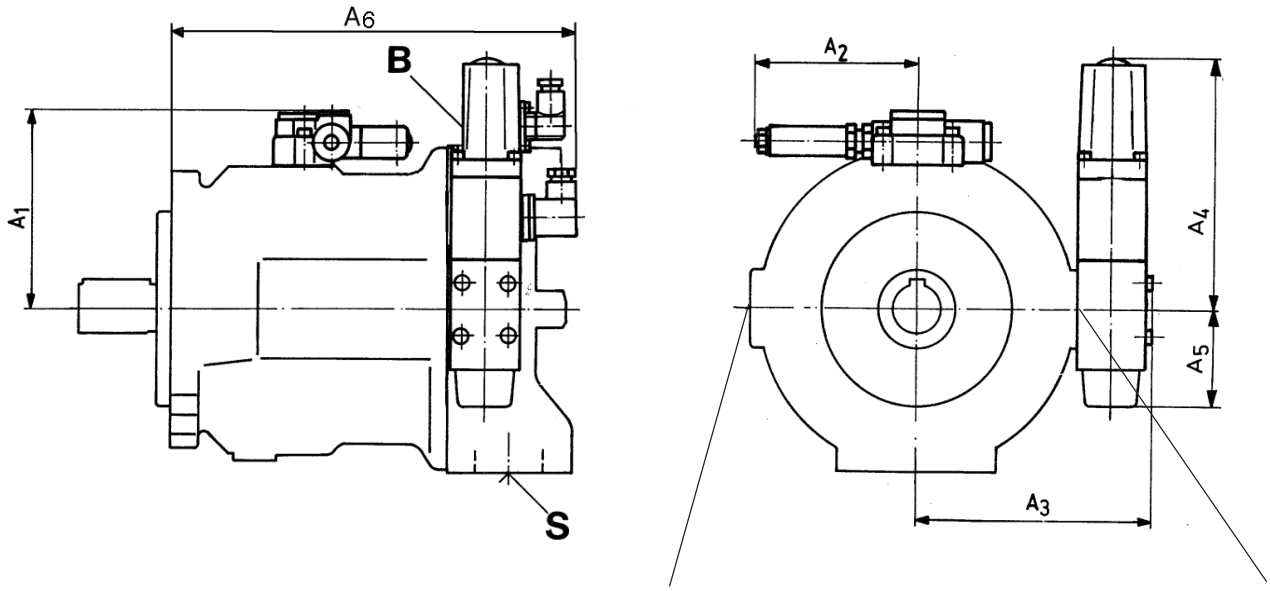

Pilot valve installed here
for anti-clockwise rotation

Pilot valve installed here
for clockwise rotation

Size	A_1	A_2	A_3	A_4	A_5	A_6
18	97	106,5	118	158	63	216

Before finalising your design, please request a certified drawing.
All rights reserved, subject to revision

Through drive

The A10VSO axial piston unit can be supplied with through drive in accordance with the coding on page 3.
The type of through drive is determined by the coding (KXX).

The following are included in the supply:
Hub, fixing screws, seal and, if required, an intermediate flange.

Combination pumps
By building on other pumps mutually independent circuits can be made available for use.

1. If the combination pump consists of **2 Brueninghaus units** and if these are to be **supplied assembled** then the two ordering codes should be joined with **"+".**
   Typical order:
   A10VSO 18 DR/31 R–PSC12K52 **+**
   A10VSO 18 DR/31 R–PSC12N00
2. If a **gear- or radial piston pump** is to be **fitted at the factory** please consult us.

Permitted bending moment

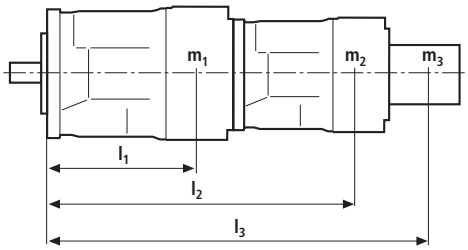

m_1, m_2 [kg] Weight of pump
l_1, l_2 [mm] Centre to centre spacing

$$M_m = (m_1 \times l_1 + m_2 \times l_2 + m_3 \times l_3) \bullet \frac{1}{102} \text{ [Nm]}$$

Size			18
Permitted bending moment	$M_{m\,zul}$	Nm	50
Weight	m	kg	12
Centre to centre spacing	l_1	mm	90

Permitted through drive torque

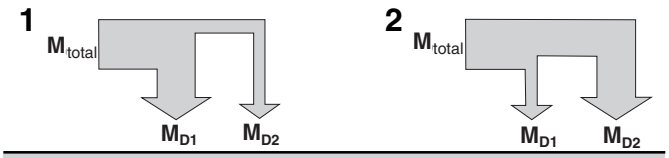

Size				18
Max. permitted. total through drive torque at shaft "S", Pump 1 (Pump 1 + Pump 2)		$M_{Ges\,max}$	Nm	80
1	Permitted.through drive torque.	M_{D1max}	Nm	80
		M_{D2max}	Nm	0
2	Permitted.through drive torque.	M_{D1max}	Nm	0
		M_{D2max}	Nm	80

Unit dimensions: combination pumps A10VSO + A10VSO

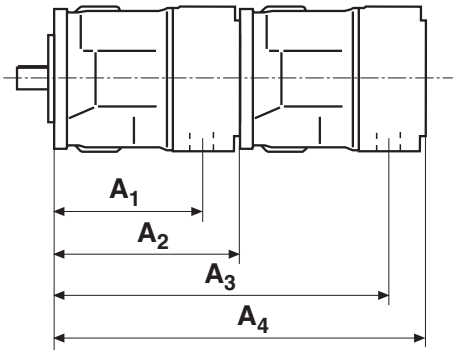

Main p. / 2nd pump	A10VSO 18				A10VSO 28				A10VSO 45				A10VSO 71				A10VSO 100				A10VSO 140			
	A_2	A_3	A_4	A_1	A_2	A_3	A_4	A_1	A_2	A_3	A_4	A_1	A_2	A_3	A_4	A_1	A_2	A_3	A_4	A_1	A_2	A_3	A_4	
A10VSO 18	164	204	349	399	164	204	349	399	184	229	374	424	217	267	412	462	275	338	483	533	275	350	495	545
					See RE 92711																			

Before finalising your design, please request a certified drawing.
All rights reserved, subject to revision

Built-on A10VSO 18
Order code **K01** or **K52**

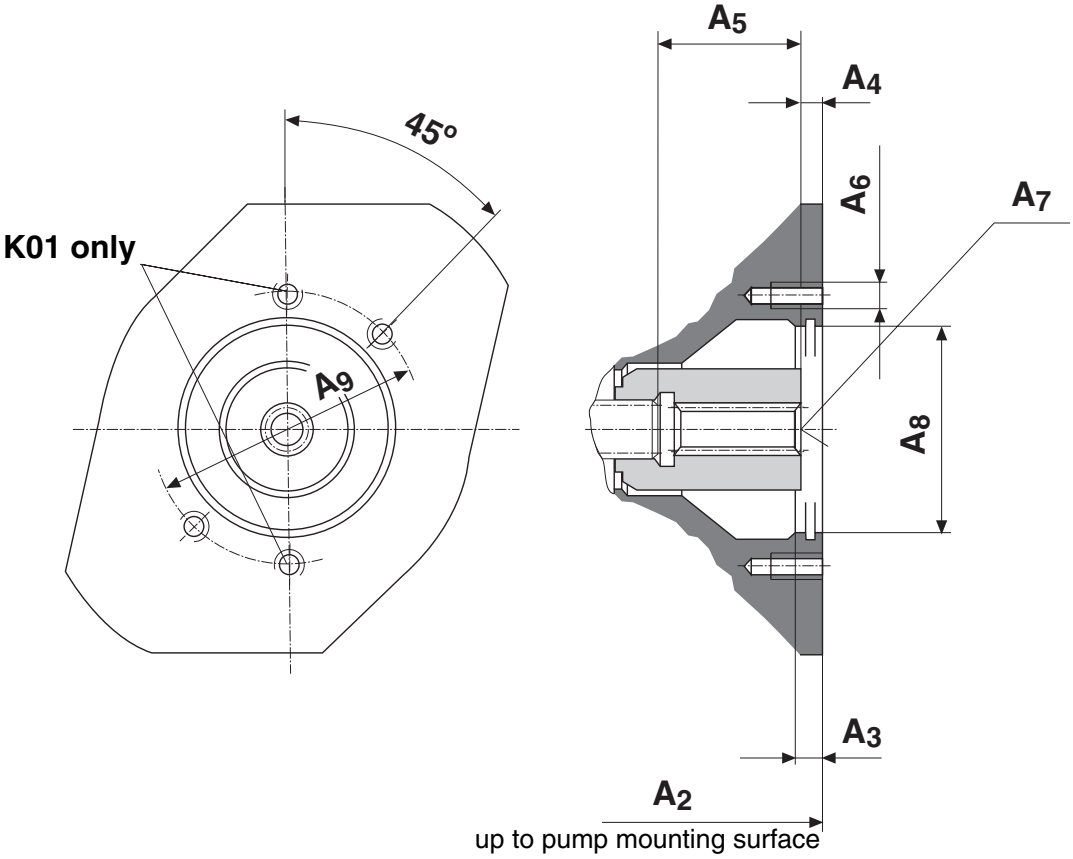

Size	A_2	A_3	A_4	A_5	A_6	A_7			A_8	A_9
K01	182	10	9	43,3	M10;16 deep	spline SAE A,	5/8";	16/32DP; 9T	Ø 82,55	106,5
K52	182	10	9	43,3	M10;16 deep	spline SAE A-B,	3/4";	16/32DP; 11T	Ø 82,55	106,5

prefered program (short delivery times)		
Ident.-Nr.	Type	
947666	A10VSO 18 DFR	/31L-PSC62N00
940520	A10VSO 18 DFR	/31R-PPA12N00
945178	A10VSO 18 DFR1	/31R-PPA12N00
942503	A10VSO 18 DR	/31R-PPA12N00

Brueninghaus Hydromatik GmbH
Plant Horb
An den Kelterwiesen 14
72160 Horb, Germany
Tel. +49 (0) 74 51-92-0
Fax +49 (0) 74 51-82 21
info.brm@boschrexroth.de
www.boschrexroth.com/brm

© 2002 by Brueninghaus Hydromatik GmbH, 72160 Horb

All rights reserved. No part of this document may be reproduced or stored, processed, duplicated or circulated using electronic systems, in any form or by any means, without the prior written authorization of Brueninghaus Hydromatik GmbH. Violations shall give rise to claims for damages.

The data specified above only serve to describe the product. They do not indicate any specific condition or suitability for a certain application. The information provided does not release the user from the obligation of own judgement and veification. It must be remembered that our products are subject to natural wear and ageing.