RE 51 144/11.02
Replaces: 11.01

Control block for clamping and drive module Type UPE 2

Series 1X

Overview of contents

Contents	Page
Features	1
Description, general	2
Technical data	3
Module overview	4 and 5
Basic module	
• Ordering details	6
• Modules	6
• Connection block	7
• Pressure relief block	7
• Lifting/lowering block	7
• Pressure maintaining block	8
Directional valve module	
• Ordering details	9 to 17
• Modules	18
• Connection block with electrical unloading	19
• Pressure relief block	19
• Sandwich block	19
• Fixing screws	20 and 21
• Engineering guidelines	21
Poppet valve module	
• Ordering details	22 to 25
• Modules	26
• Filter block	27
• Filter block with pressure relief valve	27
• Pressure relief block	28
• Pressure sequence block	29
• Pressure reducing block	29
• Circulation block with isolator valve	29
• Circulation block	29
• Control block	30 to 36
• End block	36 to 39
• Accumulator safety block	39
Directional and poppet valve module with P1 port	
• Sandwich block	19
• Pressure reducing block	40
• Circulation block with isolator valve	40

UPE2_1X•.tif

Control block type UPE 2-1X/…

Contents	Page
• Circulation block	40
• Control block	40 to 43
• End block	43 to 46
• Accumulator safety block	46
Module for separate mounting	
• Ordering details	47 to 48
• Modules with application examples	49
• Connection block	50
• Connection block with pressure relief valve	50
• Sandwich block	50
• End block	50
Module for separate mounting with P1 port	
• Sandwich block	51
• End block	51
Details regarding the type key	51 to 55
Filter block Δp-q_V-characteristic curves	55

Features

- Compact design
- No piping of the controls
- Few separation points
- Module design
- Can be individually combined
- Can be directly mounted onto the clamping and drive module, can also be separately mounted
- Ready for connection

© 2002
by Bosch Rexroth AG, Industrial Hydraulics, D-97813 Lohr am Main

All rights reserved. No part of this document may be reproduced or stored, processed, duplicated or circulated using electronic systems, in any form or by any means, without the prior written authorisation of Bosch Rexroth AG.
In the event of contravention of the above provisions, the contravening party is obliged to pay compensation.

This document was prepared with the greatest of care, and all statements have been examined for correctness.
This document is subject to alterations for reason of the continuing further developments of products.
No liability can be accepted for any incorrect or incomplete statements.

Description, general

The control blocks for the UPE 2 / UPE 3 (RE 51 142 / RE 51 147) clamping and drive modules are used to form complete hydraulic controls. They can be individually designed and assembled. The directional valve modules and poppet valve modules can be combined.

It is possible to mount these control blocks directly onto the UPE 2 / UPE 3 clamping and drive modules. It is possible, by using the appropriate modules, to separately fit the hydraulic controls into any system.

The control blocks are designed for use with hydraulic controls which have actuators that have low flow requirements. They are joined together via two tie rods.

Unit dimensions (in mm)

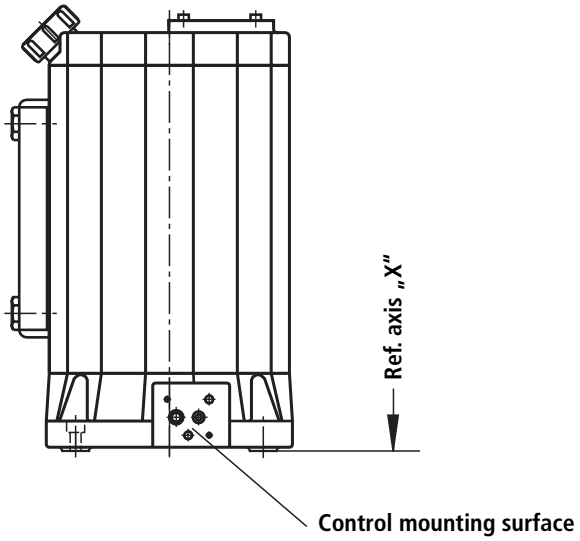

Type	size	C
UPE 2	3	85
	4	85
	5	98
	7	98
UPE 3	7	135
	9	135

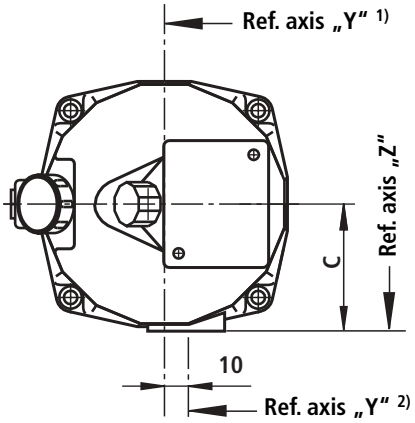

X, Y and **Z** are the **reference axes** for determining the installation dimensions when mounting a control block.

For calculating the installation heights the dimensions of the utilised control blocks, the height dimensions X on pages 19 and 27 to 46 have to be added together.

1) Only for UPE 2

2) Only for UPE 3

Technical data (for applications outside these parameters, please consult us!)

Hydraulic

Pressure fluid			Mineral oil HLP to DIN 51 524 part 2
Pressure fluid temperature range		°C	–20 to +80 (the permissible viscosity range of the pump and valves have to be taken into account!)
Ambient temperature range		°C	–30 to +50
Viscosity range		mm^2/s	2.8 to 500
Degree of contamination			Maximum permissible degree of contamination of the pressure fluid is to NAS 1638 class 9. We therefore recommend a filter with a minimum retention rate of $\beta_{10} \geq 100$.
Directional poppet valve pressure rating		bar	350 / 500
Maximum flow	q_v	L/min	20 (2/2-way directional-poppet valve)
			12 (3/2-way directional-poppet valve)

Electrical

Voltage type				DC	AC
Available voltages [1] (for AC solenoid ordering details see below)		U	V	24	Only possible via a rectifier, see ordering details for the plug-in connectors
Voltage tolerance (nominal voltage)			%	±10	
Power consumption		P	W	19	
Duty				100%	
Switching time to ISO 6403	ON	T	ms	30 to 60	
	OFF	T	ms	10 to 15	
Switching frequency			Switch/h	Up to 15.000	
Protection to DIN 40 050				IP 65	
Coil temperature [2]		t	°C	Up to 150	

[1] Special voltages on request

[2] Due to the surface temperatures of the solenoids, the European standards EN563 and EN982 have to be taken into account!

Ordering details: plug-in connector to DIN EN 175 301 - 803 and ISO 4400 for component plug "K4"

For further plug-in connectors see RE 08 006		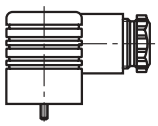	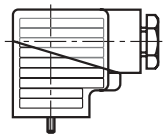	
		Material No.		
Valve side	**Colour**	Without circuitry	With indicator light 12 … 240 V	With indicator light and Z-diode protective circuit 24 V
a	grey	**00074683**	**–**	**–**
b	black	**00074684**	**–**	**–**
a/b	black	**–**	**00057292**	**00310995**

UPE2_G•.tif

Basic module „G“

Basic module „G“

- Basic module with integrated pressure relief valve for simple lifting/lowering or pressure maintaining functions
- When using the basic module „G“ it is not possible to fit further stacking units
- For further details see page 6

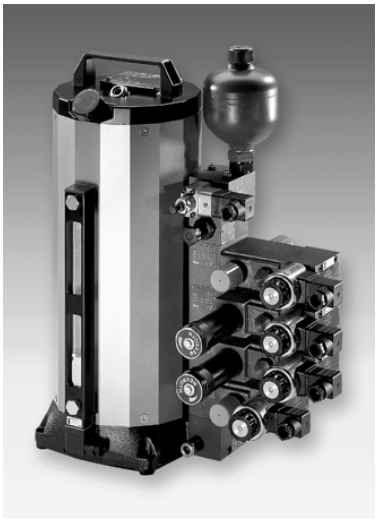

UPS2_W•.tif

Directional valve module „W“

Directional valve module „W“ [1)]

- Makes it possible to design controls using valves with a porting pattern to DIN 24 340 form A
- The number of directional valve modules is dependent on the draw-off volume (usable volume) and the pump flow
- For further details see page 9

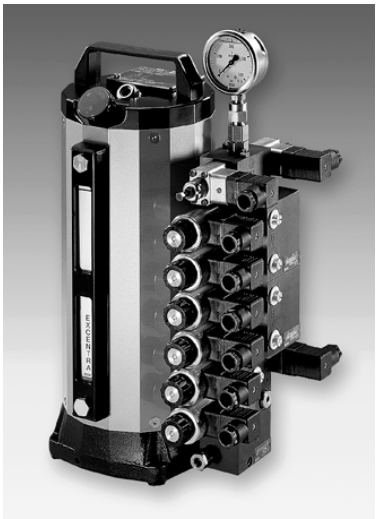

UPE2_S•.tif

Poppet valve module „S“

Poppet valve module „S“ [1)]

- The poppet valve modules basically comprise of:
  - A pressure relief block
  - One or more control blocks
  - One end block
- The design of the control is dependent on the application
- The number of poppet valve modules is dependent on the draw-off volume (usable volume) and the pump flow
- For further details see page 22

[1)] The directional valve and poppet valve modules can be combined!

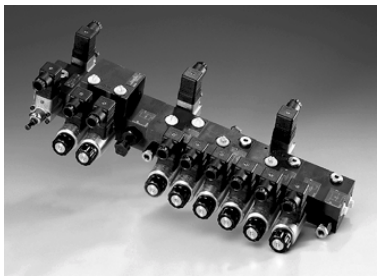

ST_LOSE•.tif

Module for separate mounting

Module for separate mounting

– Makes it possible to fit directional valves and poppet valves to a hydraulic system or machine
– For further details see page 47

Basic module, type „G“

Ordering details

Please enter the quantity required at the relevant Pos.!

Pos.	Qty.	Material No.	Component description	Type code	RE sheet
1.000	1		Clamping and drive module	UPE 2–1X/…	
2.000	1		Filter block	UPE 2–1X/F06–[19] / [20] [26 V]	s. page 27
3.000	1		Connection block	UPE 2–1X/GA–[26 V]	s. page 7
or 3.000	1		Pressure relief block	UPE 2–1X/GDB–[1] [2] / [14] / [26 V]	s. page 7
or 3.000	1		Lifting/lowering block	UPE 2–1X/GHS–[1] [2] / [14] [4] [8] [26 V]	s. page 7
or 3.000	1		Pressure maintaining block	UPE 2–1X/GDH–[1] [2] / [14] [4] [11] [8] [26 V]	s. page 8
3.001	1	00074684	Plug-in connector	Colour black	

Further details in clear text
For guidelines regarding the ordering details [1 - 26]
see pages 51 to 55

[ ] Supplements to RE sheets

Modules

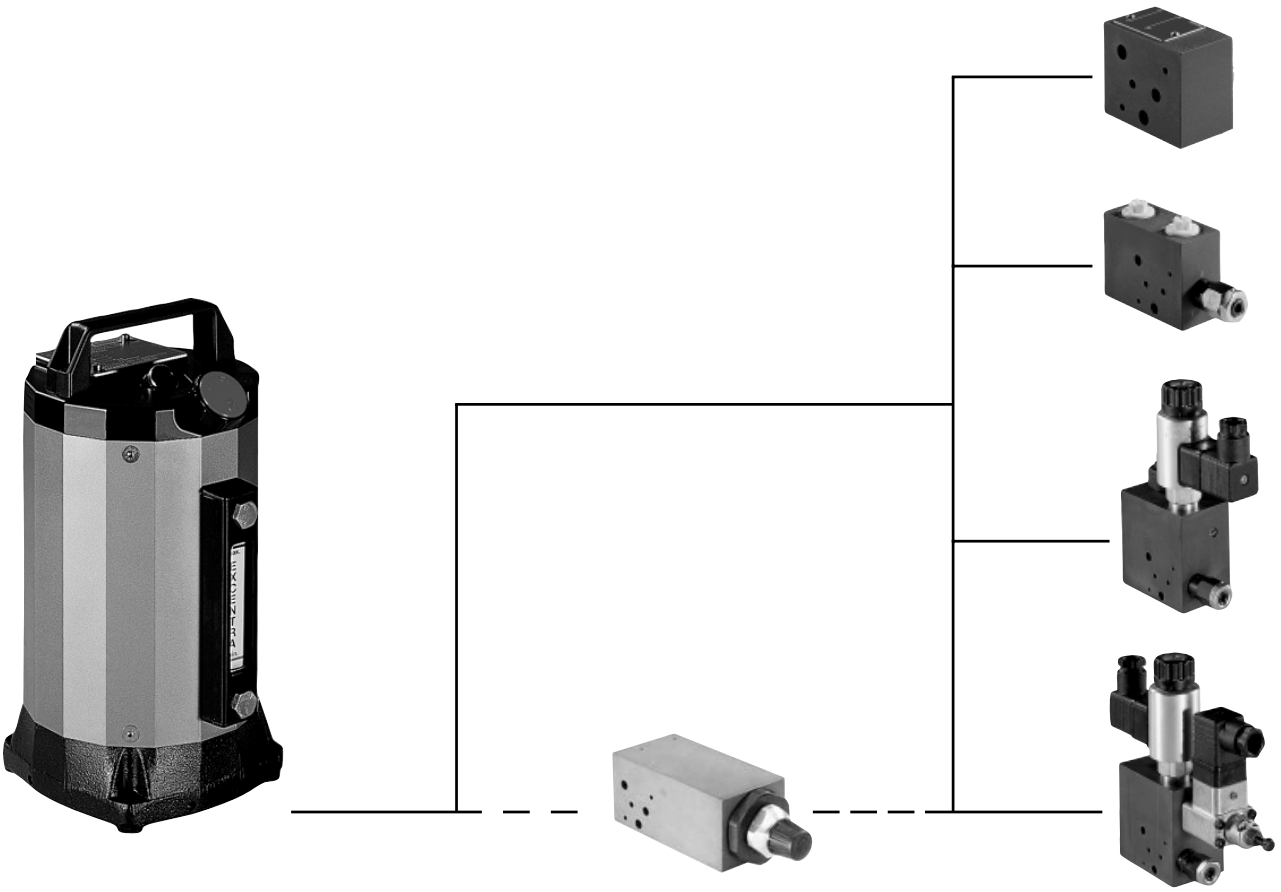

Basic module, type „G“(Dimensions in mm)

Connection block, type „GA“

Symbol

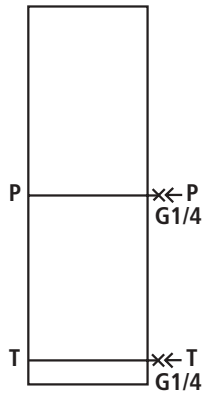

Unit dimensions **Dim. Z = 30 mm**

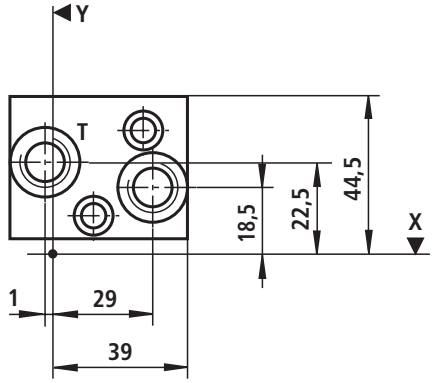

Pressure relief block, type „GDB“

Symbol

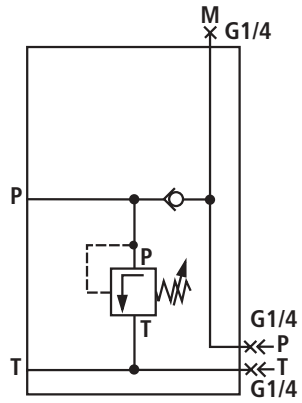

Unit dimensions **Dim. Z = 30 mm**

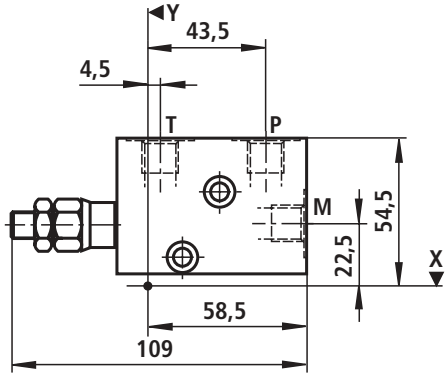

Lifting/lowering block, type „GHS“

Symbol

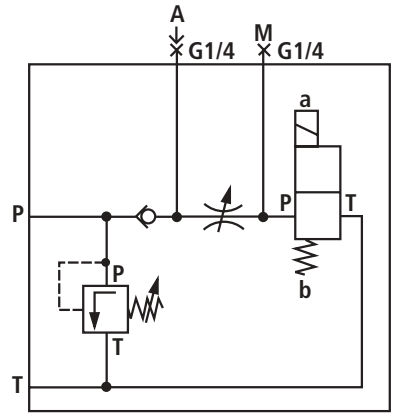

Unit dimensions **Dim. Z = 45 mm**

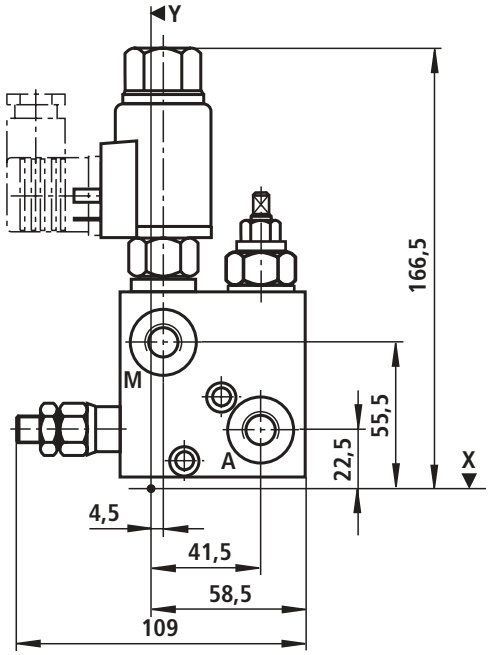

Pressure maintaining block, type „GDH“

Symbol

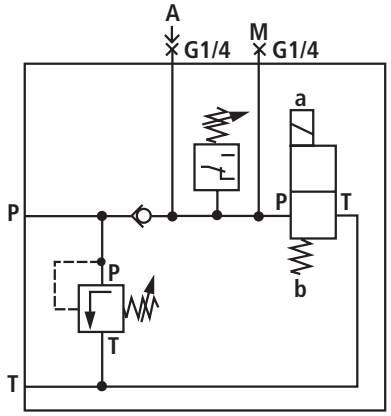

Unit dimensions **Dim. Z = 45 mm**

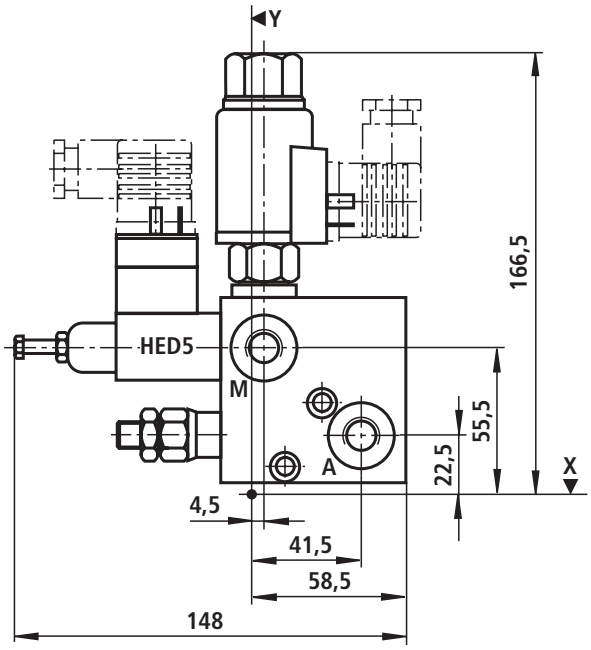

Dim. Z = 45 mm

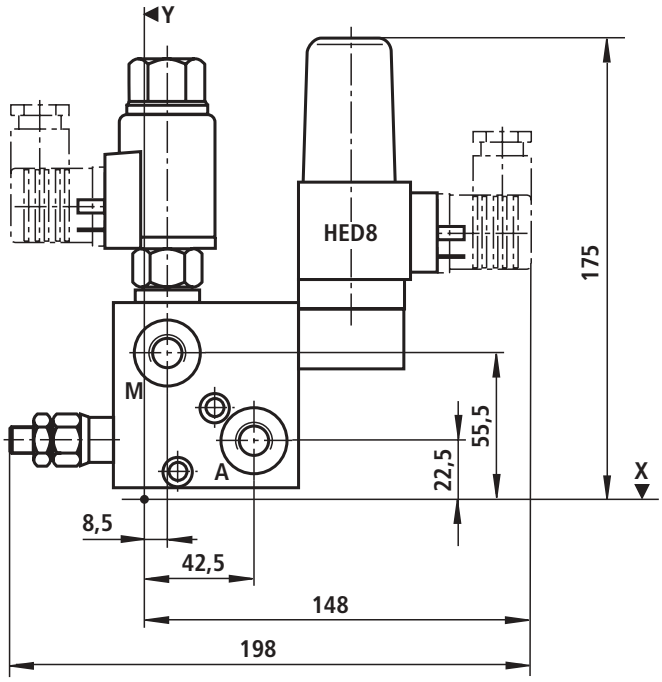

Ordering details

Please enter the quantity required at the relevant Pos.!

Pos.	Material Qty.	No.	Component description	Type code	RE sheet
1.000	1		Clamping and drive module	UPE 2–1X/…	
2.000	1		Filter block	UPE 2–1X/F06– [19] / [20] [26 V]	s. page 27
or					
2.000	1		Filter with pressure relief valve	UPE2–1X/F06DB- [1] [2] / [19] / [20] [26 V]	s. page 27
or					
2.000	1		Filter with pressure relief valve	UPE2–1X/F30DB- [1] [2] / [19] / [20] [26 V]	s. page 27
3.000	1		Pressure relief block	UPE 2–1X/WDB– [1] [2] / [14] / [26 V]	s. page 19
Vertical stacking assembly No. 0					
3.001	1		Directional valve	[ ] WE 6 [ ] 6X/ [ ]	23 178
3.002	1	00074683	Plug-in connector	Valve side a , colour grey	23 178
3.003	1	00074684	Plug-in connector	Valve side b, colour black	23 178
3.004	1		Pressure reducing valve	ZDR 6 D [ ] –4X/ [ ] Y [ ]	26 570
3.005	1		Pressure relief valve	Z [ ] DB 6 [ ] –4X/ [ ]	25 751
3.006	1		Double check valve	Z2S 6 [ ] –6X/V	21 548
3.007	1		Check valve	Z1S 6 [ ] –6X/V	21 533
3.008	1		Double throttle check valve	Z2FS 6 [ ] –4X/ [ ] V	27 506
3.009	1		Pressure switch	HED 8 OH1X/ [ ] K14 [ ] V	50 060
3.010	1	00074684	Plug-in connector	colour, black	50 060
3.011	1		Pressure switch	HED 8 OH1X/ [ ] K14 [ ] V	50 060
3.012	1	00074684	Plug-in connector	Colour, balck	50 060
3.013	1		Sandwich plate for pressure switch	HSZ 06 A [ ] –3X/V00	50 060
3.014	4		S.H.C.S.	M5 x [ ] DIN 912-10.9	s. pages 20 and 21
3.014	4		Set screw	M5 FO x [ ] DIN 939-10.9	s. pages 20 and 21
3.015	4	00009433	Hex. nut	M5-A3C RN145.15-C45	
or					
3.000	1		Connection block with electrical unloading	UPE 2–1X/WAE– [1] [2] [4] [8] [26 V]	s. page 19
3.001	1	00074683	Plug-in connector	Valve side a, colour, grey	
or					
3.000	1		Pressure relief block	UPE 2–1X/SDB– [1] [2] [26 V]	s. page 28

Further details in clear text. For guidelines regarding the ordering details [1 - 26] **see pages 51 to 55**

[ ] Supplements to RE sheet

Ordering details

Please enter the quantity required at the relevant Pos.!

Pos.	Qty.	Material No.	Component description	Type code	RE sheet
Vertical stacking assembly No. 1					
3.100	1		Sandwich block	UPE 2–1X/WZ– [V] (26)	s. page 19
3.101	1		Directional valve	[ ] WE 6 [ ] 6X/ [ ]	23 178
3.102	1	00074683	Plug-in connector	Valve side a, colour, grey	23 178
3.103	1	00074684	Plug-in connector	Valve side b, colour, black	23 178
3.104	1		Pressure reducing valve	ZDR 6 D [ ] –4X/ [ ] Y [ ]	26 570
3.105	1		Pressure relief valve	Z [ ] DB 6 [ ] –4X/ [ ]	25 751
3.106	1		Double check valve	Z2S 6 [ ] –6X/V	21 548
3.107	1		Check valve	Z1S 6 [ ] –6X/V	21 533
3.108	1		Double throttle check valve	Z2FS 6 [ ] –4X/ [ ] V	27 506
3.109	1		Pressure switch	HED 8 OH1X/ [ ] K14 [ ] V	50 060
3.110	1	00074684	Plug-in connector	Colour, balck	50 060
3.111	1		Pressure switch	HED 8 OH1X/ [ ] K14 [ ] V	50 060
3.112	1	00074684	Plug-in connector	Colour, black	50 060
3.113	1		Sandwich plate for pressure switch	HSZ 06 A [ ] –3X/V00	50 060
3.114	4		S.H.C.S.	M5 x [ ] DIN 912-10.9	s. pages 20 and 21
or 3.114	4		Set screw	M5 FO x [ ] DIN 939-10.9	s. pages 20 and 21
3.115	4	00009433	Hex. nut	M5-A3C RN145.15-C45	

Further details in clear text
For guidelines regarding the ordering details [ ] (1 - 26) **see pages 51 to 55**

[ ] Supplements to RE sheet

Continued on page 11

Ordering details

Please enter the quantity required at the relevant Pos.!

Pos.	Qty.	Material No.	Component description	Type code	RE sheet
Vertical stacking assembly No. 2					
3.200	1		Sandwich block	UPE 2–1X/WZ– [26: V]	s. page 19
3.201	1		Directional valve	[ ] WE 6 [ ] 6X/ [ ]	23 178
3.202	1	00074683	Plug-in connector	Valve side a, colour, grey	23 178
3.203	1	00074684	Plug-in connector	Valve side b, colour, black	23 178
3.204	1		Pressure reducing valve	ZDR 6 D [ ] –4X/ [ ] Y [ ]	26 570
3.205	1		Pressure relief valve	Z [ ] DB 6 [ ] –4X/ [ ]	25 751
3.206	1		Double check valve	Z2S 6 [ ] –6X/V	21 548
3.207	1		Check valve	Z1S 6 [ ] –6X/V	21 533
3.208	1		Double throttle check valve	Z2FS 6 [ ] –4X/ [ ] V	27 506
3.209	1		Pressure switch	HED 8 OH1X/ [ ] K14 [ ] V	50 060
3.210	1	00074684	Plug-in connector	Colour, black	50 060
3.211	1		Pressure switch	HED 8 OH1X/ [ ] K14 [ ] V	50 060
3.212	1	00074684	Plug-in connector	Colour, black	50 060
3.213	1		Sandwich plate for pressure switch	HSZ 06 A [ ] –3X/V00	50 060
3.214	4		S.H.C.S.	M5 x [ ] DIN 912-10.9	s. pages 20 and 21
3.214	4		Set screw	M5 FO x [ ] DIN 939-10.9	s. pages 20 and 21
3.215	4	00009433	Hex. nut	M5-A3C RN145.15-C45	

Further details in clear text
For guidelines regarding the ordering details [1 - 26] **see pages 51 to 55**

[ ] Supplements to RE sheet

Continued on 12

Ordering details

Please enter the quantity required at the relevant Pos.!

Pos.	Qty.	Material No.	Component description	Type code	RE sheet
Vertical stacking assembly No. 3					
3.300	1		Sandwich block	UPE 2–1X/WZ– [26: V]	s. page 19
3.301	1		Directional valve	[ ] WE 6 [ ] 6X/ [ ]	23 178
3.302	1	00074683	Plug-in connector	Valve side a, colour, grey	23 178
3.303	1	00074684	Plug-in connector	Valve side b, colour, black	23 178
3.304	1		Pressure reducing valve	ZDR 6 D [ ] –4X/ [ ] Y [ ]	26 570
3.305	1		Pressure relief valve	Z [ ] DB 6 [ ] –4X/ [ ]	25 751
3.306	1		Double check valve	Z2S 6 [ ] –6X/V	21 548
3.307	1		Check valve	Z1S 6 [ ] –6X/V	21 533
3.308	1		Double throttle check valve	Z2FS 6 [ ] –4X/ [ ] V	27 506
3.309	1		Pressure switch	HED 8 OH1X/ [ ] K14 [ ] V	50 060
3.310	1	00074684	Plug-in connector	Colour, black	50 060
3.311	1		Pressure switch	HED 8 OH1X/ [ ] K14 [ ] V	50 060
3.312	1	00074684	Plug-in connector	Colour, black	50 060
3.313	1		Sandwich plate for pressure switch	HSZ 06 A [ ] –3X/V00	50 060
3.314	4		S.H.C.S.	M5 x [ ] DIN 912-10.9	s. pages 20 and 21
3.314	4		Set screw	M5 FO x [ ] DIN 939-10.9	s. pages 20 and 21
3.315	4	00009433	Hex. nut	M5-A3C RN145.15-C45	

Further details in clear text
For guidelines regarding the ordering details [1 - 26] **see pages 51 to 55**

[ ] Supplements ro RE sheet

Continued on page 13

Ordering details

Please enter the quantity required at the relevant Pos.!

Pos.	Qty.	Material No.	Component description	Type code	RE sheet
Vertical stacking assembly No. 4					
3.400	1		Sandwich block	UPE 2–1X/WZ– [26: V]	s. page 19
3.401	1		Wegeventil	[ ] WE 6 [ ] 6X/ [ ]	23 178
3.402	1	00074683	Plug-in connector	Valve side a, colour, grey	23 178
3.403	1	00074684	Plug-in connector	Valve side b, colour, black	23 178
3.404	1		Pressure reducing valve	ZDR 6 D [ ] –4X/ [ ] Y [ ]	26 570
3.405	1		Pressure relief valve	Z [ ] DB 6 [ ] –4X/ [ ]	25 751
3.406	1		Double check valve	Z2S 6 [ ] –6X/V	21 548
3.407	1		Check valve	Z1S 6 [ ] –6X/V	21 533
3.408	1		Double throttle check valve	Z2FS 6 [ ] –4X/ [ ] V	27 506
3.409	1		Pressure switch	HED 8 OH1X/ [ ] K14 [ ] V	50 060
3.410	1	00074684	Plug-in connector	Colour, black	50 060
3.411	1		Pressure switch	HED 8 OH1X/ [ ] K14 [ ] V	50 060
3.412	1	00074684	Plug-in connector	Colour, black	50 060
3.413	1		Sandwich plate for pressure switch	HSZ 06 A [ ] –3X/V00	50 060
3.414	4		S.H.C.S.	M5 x [ ] DIN 912-10.9	s. pages 20 and 21
3.414	4		Set screw	M5 FO x [ ] DIN 939-10.9	s. pages 20 and 21
3.415	4	00009433	Hex. nut	M5-A3C RN145.15-C45	

Further details in clear text
For guidelines regarding the ordering details [1 - 26] **see pages 51 to 55**

[ ] Supplements to RE sheets

Continued on page 14

Ordering details

Please enter the quantity required at the relevant Pos.!

Pos.	Qty.	Material No.	Component description	Type code	RE sheet
Vertical stacking assembly No. 5					
3.500	1		Sandwich block	UPE 2–1X/WZ– [26: V]	s. page 19
3.501	1		Directional valve	[ ] WE 6 [ ] 6X/ [ ]	23 178
3.502	1	00074683	Plug-in connector	Valve side a, colour, grey	23 178
3.503	1	00074684	Plug-in connector	Valve side b, colour, black	23 178
3.504	1		Pressure reducing valve	ZDR 6 D [ ] –4X/ [ ] Y [ ]	26 570
3.505	1		Pressure relief valve	Z [ ] DB 6 [ ] –4X/ [ ]	25 751
3.506	1		Double check valve	Z2S 6 [ ] –6X/V	21 548
3.507	1		Check valve	Z1S 6 [ ] –6X/V	21 533
3.508	1		Double throttle check valve	Z2FS 6 [ ] –4X/ [ ] V	27 506
3.509	1		Pressure switch	HED 8 OH1X/ [ ] K14 [ ] V	50 060
3.510	1	00074684	Plug-in connector	Farbe, schwarz	50 060
3.511	1		Pressure switch	HED 8 OH1X/ [ ] K14 [ ] V	50 060
3.512	1	00074684	Plug-in connector	Colour, black	50 060
3.513	1		Sandwich plate for pressure switch	HSZ 06 A [ ] –3X/V00	50 060
3.514	4		S.H.C.S.	M5 x [ ] DIN 912-10.9	s. page 20 and 21
3.514	4		Set screw	M5 FO x [ ] DIN 939-10.9	s. page 20 and 21
3.515	4	00009433	Hex. nut	M5-A3C RN145.15-C45	

Further details in clear text
For guidelines regarding the ordering details [1 - 26] **see pages 51 to 55**

[ ] Supplements to RE sheet

Continued on page 15

Ordering details

Please enter the quantity required at the relevant Pos.!

Pos.	Qty.	Material No.	Component description	Type code	RE sheet
Vertical stacking assembly No. 6					
3.600	1		Sandwich block	UPE 2–1X/WZ– [26 V]	s. page 19
3.601	1		Directional valve	[ ] WE 6 [ ] 6X/ [ ]	23 178
3.602	1	00074683	Plug-in connector	Valve side a, colour, grey	23 163
3.603	1	00074684	Plug-in connector	Valve side b, colour, black	23 163
3.604	1		Pressure reducing valve	ZDR 6 D [ ] –4X/ [ ] Y [ ]	26 570
3.605	1		Pressure relief valve	Z [ ] DB 6 [ ] –4X/ [ ]	25 751
3.606	1		Double check valve	Z2S 6 [ ] –6X/V	21 548
3.607	1		Check valve	Z1S 6 [ ] –6X/V	21 533
3.608	1		Double throttle check valve	Z2FS 6 [ ] –4X/ [ ] V	27 506
3.609	1		Pressure switch	HED 8 OH1X/ [ ] K14 [ ] V	50 060
3.610	1	00074684	Plug-in connector	Colour, black	50 060
3.611	1		Pressure switch	HED 8 OH1X/ [ ] K14 [ ] V	50 060
3.612	1	00074684	Plug-in connector	Colour, black	50 060
3.613	1		Sandwich plate for pressure switch	HSZ 06 A [ ] –3X/V00	50 060
3.614	4		S.H.C.S.	M5 x [ ] DIN 912-10.9	s. pages 20 and 21
3.614	4		Set screw	M5 FO x [ ] DIN 939-10.9	s. pages 20 and 21
3.615	4	00009433	Hex. nut	M5-A3C RN145.15-C45	

Further details in clear text
For guidelines regarding the ordering details [1 - 26] **see pages 51 to 55**

[ ] Supplements to RE sheet

Continued on page 16

Ordering details

Please enter the quantity required at the relevant Pos.!

Pos.	Qty.	Material No.	Component description	Type code	RE sheet
4.000	1		End block	UPE 2–1X/WSE– [22] [26 V]	s. page 37
or					
4.000	1		End block with pressure switch	UPE 2–1X/WSED– [9] [11] – [12] / [14] / [15] / [26 V]	s. page 37
4.001	1 or 2	00074684	Plug-in connector	Colour, black	
or					
4.000	1		End block with accumulator and isolator valve	UPE 2–1X/SESA [9] [11] / [12] / [18] [26 V]	s. page 39
4.001	1 or 2	00074684	Plug-in connector	Colour, black	
or					
4.000	1		Accumulator safety block	UPE 2–1X/SSB– [1] [2] / [14] / [18] [26 V]	s. page 39
5.000	2		S.H.C.S.	M6 x [ ] DIN 912-10.9	
5.000	2		Tie rod	M6 x [ ] DIN 975-10.9	
5.001	2	04001046	Hex. nut	M6–10 DIN 934	
5.002	2	04001047	Lock nut	M6, verzinkt	
When designing a control with two separate pressure ports, P and P1:					
3.X00	1		Pressure reducing block with P1 port	UPE 2–1X/SDRP1– [16] / [17] / [14] / [26 V]	s. page 40
3.X00	1		Sandwich block with P1 port	UPE 2–1X/WZP1– [26 V]	s. page 19
3.X01	1		Directional valve	[ ] WE 6 [ ] 6X/ [ ]	23 178
3.X02	1	00074683	Plug-in connector	Valve side a, colour grey	23 163
3.X03	1	00074684	Plug-in connector	Valve side b, colour black	23 163
3.X04	1		Pressure reducing valve	ZDR 6 D [ ] –4X/ [ ] Y [ ]	26 570
3.X05	1		Pressure relief valve	Z [ ] DB 6 [ ] –4X/ [ ]	25 751
3.606	1		Double check valve	Z2S 6 [ ] –6X/V	21 548
3.X07	1		Check valve	Z1S 6 [ ] –6X/V	21 533
3.X08	1		Double throttle check valve	Z2FS 6 [ ] –4X/ [V]	27 506
3.X09	1		Pressure switch	HED 8 OH1X/ [ ] K14 [V]	50 060
3.X10	1	00074684	Plug-in connector	Colour black	50 060
3.X11	1		Pressure switch	HED 8 OH1X/ [ ] K14 [V]	50 060
3.X12	1	00074684	Plug-in connector	Colour black	50 060
3.X13	1		Sandwich plate for pressure switch	HSZ 06 A [ ] –3X/V00	50 060
3.X14	4		S.H.C.S.	M5 x [ ] DIN 912-10.9	s. pages 20 and 21
3.X14	4		Set screw	M5 FO x [ ] DIN 939-10.9	s. pages 20 and 21
3.X15	4	00009433	Hex. nut	M5-A3C RN145.15-C45	

Further details in clear text

For guidelines regarding the ordering details [1 - 26] **see pages 51 to 55**

[ ] Supplements to RE sheet

Continued on page 17

Ordering details

Please enter the quantity required at the relevant Pos.!

Pos.	Qty.	Material No.	Component description	Type code	RE sheet
4.000	1		End block with P1 port	UPE 2–1X/WSEP1– [22] [26 V]	s. page 43
or					
4.000	1		End block with pressure switch and P1 port	UPE 2–1X/WSEDP1– [9] [11] – [12] / [14] / [15] / [26 V]	s. page 44
4.001	1 or 2	00074684	Plug-in connector	Colour, black	
or					
4.000	1		End block with accumulator, isolation valve and P1-Kanal	UPE 2–1X/SESAP1 [9] [11] / [12] / [18] [26 V]	s. page 46
4.001	1 or 2	00074684	Plug-in connector	Colour, black	
or					
4.000	1		Accumulator safety block with P1 port	UPE 2–1X/SSBP1– [1] [2] / [14] / [18] [26 V]	s. page 46
5.000	2		S.H.C.S.	M6 x [ ] DIN 912-10.9	
5.000	2		Tie rod	M6 x [ ] DIN 975-10.9	
5.001	2	04001046	Hex. nut	M6–10 DIN 934	
5.002	2	04001047	Lock nut	M6, galvanized	

Further details in clear text
For guidelines regarding the ordering details [1 - 26] **see pages 51 to 55**

[ ] Supplements to RE sheets

Modules

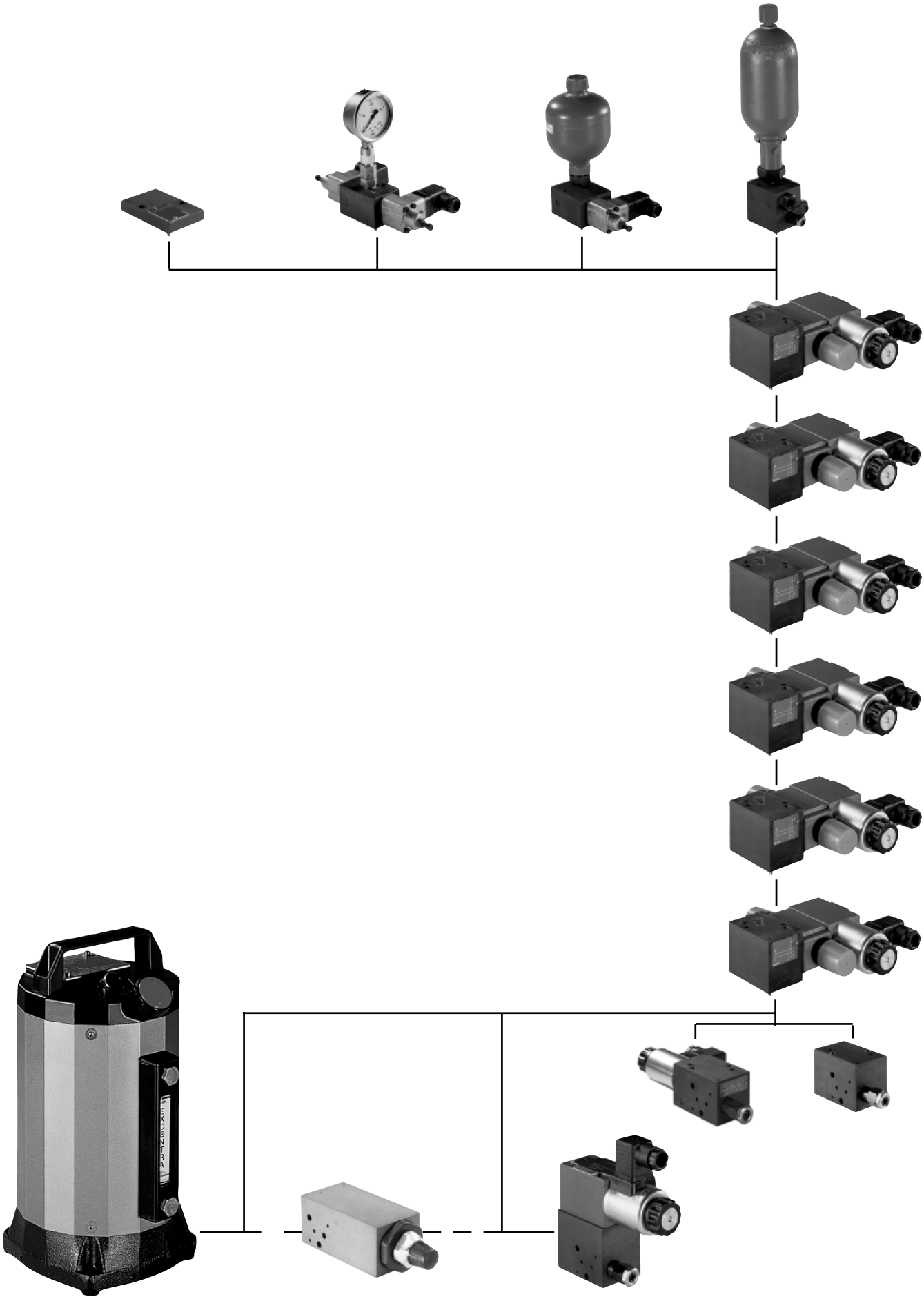

Connection block with electrical unloading, type „WAE“

Symbol

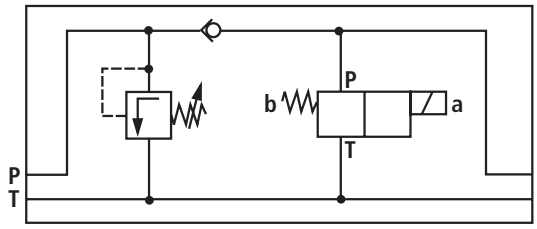

Unit dimensions **Dim. Z = 45 mm**

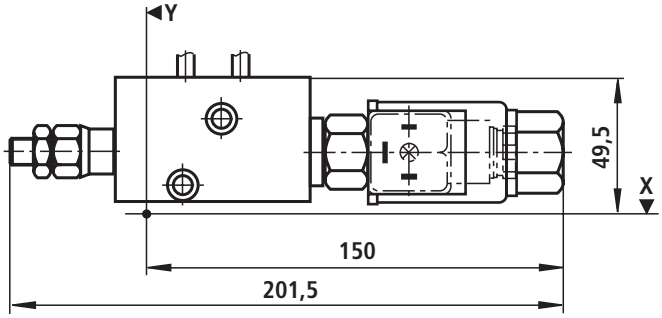

Pressure relief block, type „WDB“

Symbol

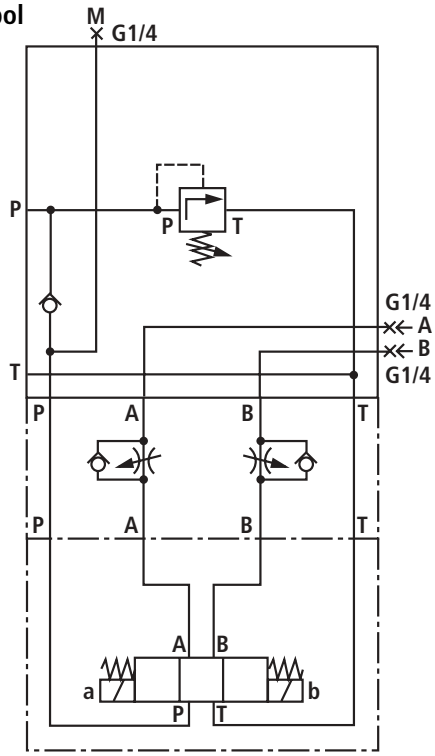

Unit dimensions **Dim. Z = 50 mm**

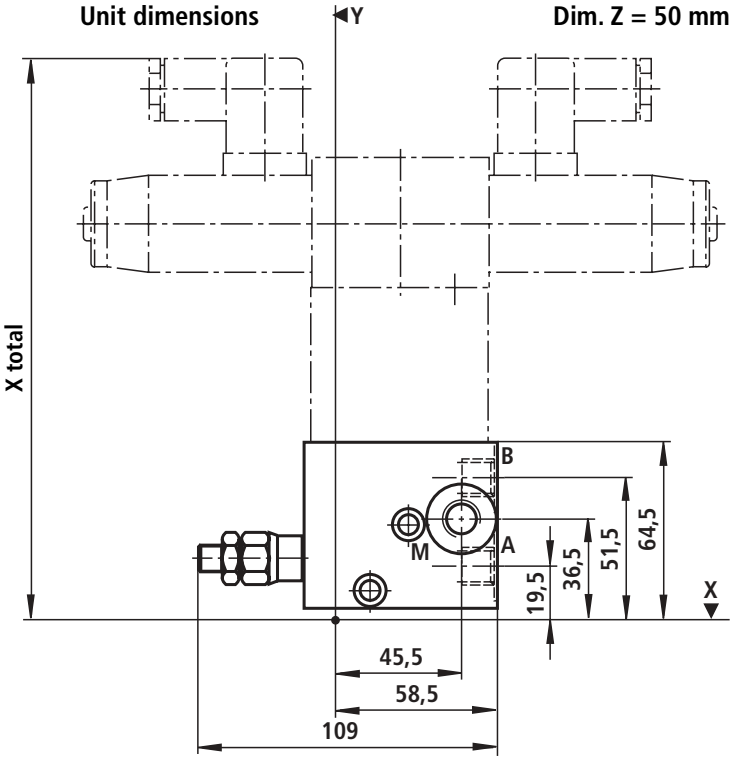

Sandwich block, type „WZ“

Symbol

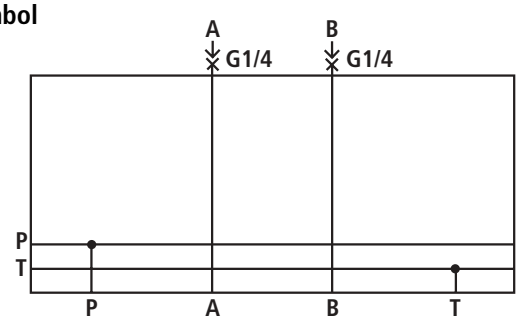

Unit dimensions **Dim. Z = 45 mm**

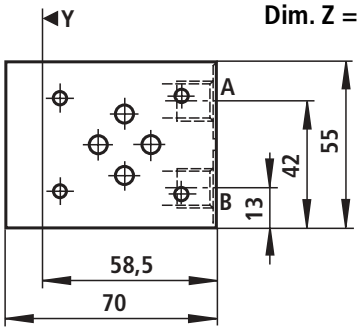

Sandwich block with P1 port, type „WZP1“

Symbol

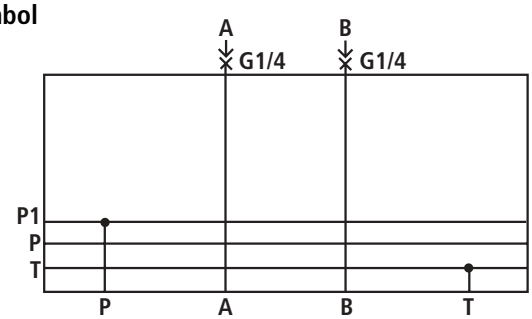

Unit dimensions **Dim. Z = 45 mm**

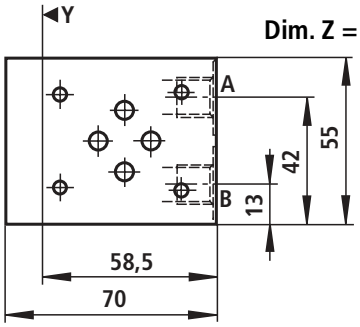

Fixing screws

Screw selection table for vertical stacking assemblies in conjunction with a WE 6 directional valve (RE 23 178)

Pressure reducing valve (clamping length 40 mm) to RE 26 570	**Pressure relief valve** (clamping length 40 mm) to RE 25 751	**Double check valve** (clamping length 40 mm) to RE 21 548	**Check valve** (clamping length 40 mm) to RE 21 533	**Double throttle check valve** (clamping length 40 mm) to RE 27 506	**Pressure switch with sandwich plate** (clamping length 40 mm) to RE 50 060	**S.H.C.S. DIN 912–10.9 set screw DIN 939–10.9 M_A = 8.9 Nm**		**Material No.**
ZDR 6 D..-4X/...						M5 x 90	DIN 912	009424 [1]
	Z.DB 6 V...-4X/...					M5 x 90	DIN 912	009424 [1]
		Z2S 6..-6X/...				M5 x 90	DIN 912	009424 [1]
			Z1S 6..-../...			M5 x 90	DIN 912	009424 [1]
				Z2FS 6-4X/...		M5 x 90	DIN 912	009424 [1]
					HED 8 OH1X/..	M5 x 90	DIN 912	009424 [1]
ZDR 6 D..-4X/...	Z.DB 6 V...-4X/...					M5 x 130	DIN 912	LS0405 [1]
ZDR 6 D..-4X/...		Z2S 6..-6X/...				M5 x 130	DIN 912	LS0405 [1]
ZDR 6 D..-4X/...			Z1S 6..-../...			M5 x 130	DIN 912	LS0405 [1]
ZDR 6 D..-4X/...				Z2FS 6-4X/...		M5 x 130	DIN 912	LS0405 [1]
ZDR 6 D..-4X/...					HED 8 OH1X/..	M5 x 130	DIN 912	LS0405 [1]
	Z.DB 6 V...-4X/...	Z2S 6..-6X/...				M5 x 130	DIN 912	LS0405 [1]
	Z.DB 6 V...-4X/...		Z1S 6..-../...			M5 x 130	DIN 912	LS0405 [1]
	Z.DB 6 V...-4X/...			Z2FS 6-4X/...		M5 x 130	DIN 912	LS0405 [1]
	Z.DB 6 V...-4X/...				HED 8 OH1X/..	M5 x 130	DIN 912	LS0405 [1]
		Z2S 6..-6X/...	Z1S 6..-../...			M5 x 130	DIN 912	LS0405 [1]
		Z2S 6..-6X/...		Z2FS 6-4X/...		M5 x 130	DIN 912	LS0405 [1]
		Z2S 6..-6X/...			HED 8 OH1X/..	M5 x 130	DIN 912	LS0405 [1]
			Z1S 6..-../...	Z2FS 6-4X/...		M5 x 130	DIN 912	LS0405 [1]
			Z1S 6..-../...		HED 8 OH1X/..	M5 x 130	DIN 912	LS0405 [1]
				Z2FS 6-4X/...	HED 8 OH1X/..	M5 x 130	DIN 912	LS0405 [1]
ZDR 6 D..-4X/...	Z.DB 6 V...-4X/...	Z2S 6..-6X/...				M5FO x 170	DIN 939	012016
ZDR 6 D..-4X/...	Z.DB 6 V...-4X/...		Z1S 6..-../...			M5FO x 170	DIN 939	012016
ZDR 6 D..-4X/...	Z.DB 6 V...-4X/...			Z2FS 6-4X/...		M5FO x 170	DIN 939	012016
ZDR 6 D..-4X/...	Z.DB 6 V...-4X/...				HED 8 OH1X/..	M5FO x 170	DIN 939	012016
ZDR 6 D..-4X/...		Z2S 6..-6X/...	Z1S 6..-../...			M5FO x 170	DIN 939	012016
ZDR 6 D..-4X/...		Z2S 6..-6X/...		Z2FS 6-4X/...		M5FO x 170	DIN 939	012016
ZDR 6 D..-4X/...		Z2S 6..-6X/...			HED 8 OH1X/..	M5FO x 170	DIN 939	012016
ZDR 6 D..-4X/...			Z1S 6..-../...	Z2FS 6-4X/...		M5FO x 170	DIN 939	012016
ZDR 6 D..-4X/...			Z1S 6..-../...		HED 8 OH1X/..	M5FO x 170	DIN 939	012016
ZDR 6 D..-4X/...				Z2FS 6-4X/...	HED 8 OH1X/..	M5FO x 170	DIN 939	012016
	Z.DB 6 V...-4X/...	Z2S 6..-6X/...	Z1S 6..-../...			M5FO x 170	DIN 939	012016
	Z.DB 6 V...-4X/...	Z2S 6..-6X/...		Z2FS 6-4X/...		M5FO x 170	DIN 939	012016
	Z.DB 6 V...-4X/...	Z2S 6..-6X/...			HED 8 OH1X/..	M5FO x 170	DIN 939	012016
	Z.DB 6 V...-4X/...		Z1S 6..-../...	Z2FS 6-4X/...		M5FO x 170	DIN 939	012016
	Z.DB 6 V...-4X/...		Z1S 6..-../...		HED 8 OH1X/..	M5FO x 170	DIN 939	012016
	Z.DB 6 V...-4X/...			Z2FS 6-4X/...	HED 8 OH1X/..	M5FO x 170	DIN 939	012016
		Z2S 6..-6X/...	Z1S 6..-../...	Z2FS 6-4X/...		M5FO x 170	DIN 939	012016
		Z2S 6..-6X/...	Z1S 6..-../...		HED 8 OH1X/..	M5FO x 170	DIN 939	012016
			Z1S 6..-../...	Z2FS 6-4X/...	HED 8 OH1X/..	M5FO x 170	DIN 939	012016

p_{max} = 315 bar

[1] Hex. nut (Material No.: 009433) M5-A3C RN145.15-C45
not required when ordering!

Fixing screws

Pressure reducing valve (clamping length 40 mm) to RE 26 570	**Pressure relief valve** (clamping length 40 mm) to RE 25 751	**Double check valve** (clampling length 40 mm) to RE 21 548	**Check valve** (clamping length 40 mm) to RE 21 533	**Double throttle check valve** (clamping length 40 mm) to RE 27 506	**Press. switch with sandwich plate** (clamping length 40 mm) to RE 50 060	**S.H.C.S. DIN 912–10.9 set scarews DIN 939–10.9 M_A = 8.9 Nm**		**Material No.**
ZDR 6 D..-4X/...	Z.DB 6 V...-4X/...	Z2S 6..-6X/...	Z1S 6..-../...			M5FO x 210	DIN 939	012018 [1)]
ZDR 6 D..-4X/...	Z.DB 6 V...-4X/...	Z2S 6..-6X/...		Z2FS 6-4X/...		M5FO x 210	DIN 939	012018 [1)]
ZDR 6 D..-4X/...	Z.DB 6 V...-4X/...	Z2S 6..-6X/...			HED 8 OH1X/..	M5FO x 210	DIN 939	012018 [1)]
	Z.DB 6 V...-4X/...	Z2S 6..-6X/...	Z1S 6..-../...	Z2FS 6-4X/...		M5FO x 210	DIN 939	012018 [1)]
	Z.DB 6 V...-4X/...	Z2S 6..-6X/...	Z1S 6..-../...		HED 8 OH1X/..	M5FO x 210	DIN 939	012018 [1)]
		Z2S 6..-6X/...	Z1S 6..-../...	Z2FS 6-4X/...	HED 8 OH1X/..	M5FO x 210	DIN 939	012018 [1)]
ZDR 6 D..-4X/...	Z.DB 6 V...-4X/...	Z2S 6..-6X/...	Z1S 6..-../...	Z2FS 6-4X/...		M5FO x 250	DIN 939	012020 [2)]
ZDR 6 D..-4X/...		Z2S 6..-6X/...	Z1S 6..-../...	Z2FS 6-4X/...	HED 8 OH1X/..	M5FO x 250	DIN 939	012020 [2)]
ZDR 6 D..-4X/...	Z.DB 6 V...-4X/...		Z1S 6..-../...	Z2FS 6-4X/...	HED 8 OH1X/..	M5FO x 250	DIN 939	012020 [2)]
ZDR 6 D..-4X/...	Z.DB 6 V...-4X/...	Z2S 6..-6X/...		Z2FS 6-4X/...	HED 8 OH1X/..	M5FO x 250	DIN 939	012020 [2)]
ZDR 6 D..-4X/...	Z.DB 6 V...-4X/...	Z2S 6..-6X/...	Z1S 6..-../...		HED 8 OH1X/..	M5FO x 250	DIN 939	012020 [2)]
	Z.DB 6 V...-4X/...	Z2S 6..-6X/...	Z1S 6..-../...	Z2FS 6-4X/...	HED 8 OH1X/..	M5FO x 250	DIN 939	012020 [2)]
Direct operated directional valve		WE 6				M5 x 50	DIN 912	006710
Proportional valve		WR. 6				M5 x 40	DIN 912	072283

p_{max} = 315 bar

[1)] p_{max} = 250 bar

[2)] p_{max} = 210 bar

Engineering guidelines

Pressure reducing valve combined with a double check valve

The pressure reducing valve ZDR..DA (with pressure reduction in port A) must always be fitted between the directional valve and the double check valve Z2S... Leak-free closure of the system cannot otherwise be ensured.

Pressure relief valve combined with a double check valve

Leak free closure of the actuator is not possible if a pressure relief valve type ZDB../Z2DB.., effective in ports A und/or B is used with a double check valve.

Pressure switches combined with double throttle check valve, meter-in control

The pressure switch HED 8 OH, effective in ports A and/or B, is fitted between the sub-plate and the double throttle check valve Z2FS.

Pressure switches combined with double throttle check valve, meter-out control

The pressure switch HED 8 OH, effective in ports A and/or B, is fitted between the directional valve and the double throttle check valve Z2FS.

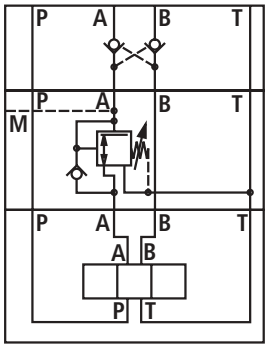

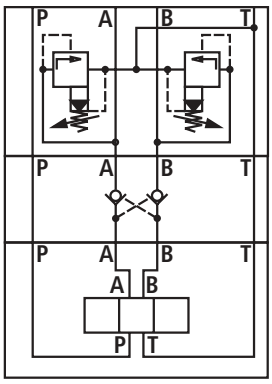

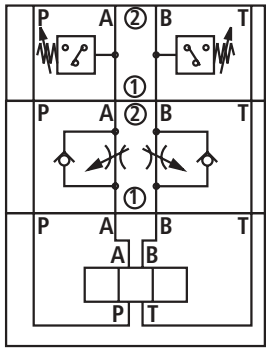

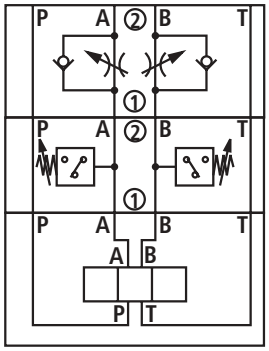

The circuits shown are only examples.
These engineering guidelines also apply to valves of similar design and function.

Ordering details

Please enter the quantity required at the relevant Pos.!

Pos.	Qty.	Material No.	Component description	Type code	RE sheet
1.000	1		Clamping and drive module	UPE 2–1X/…	
2.000	1		Filter block	UPE 2–1X/F06– [19] / [20] [26 V]	s. page 27
3.000	1		Filer block with pressure relief valve	UPE 2–1XF06DB– [1] [2] / [19] / [20] [26 V]	s. page 27
or 3.000	1		Filter block with pressure relief valve	UPE 2–1XF30DB– [1] [2] / [19] / [20] [26 V]	s. page 27
or 3.000	1		Filter block with pressure relief and circulation valves	UPE 2–1X/F30DBU– [1] [2] / [4] [8] / [19] / [20] [26 V]	s. page 28
3.001	1	00074683	Plug-in connector	Colour, grey	
or 3.000	1		Filter block with pressure sequence valve	UPE2–1X/F20DA– [23] / [24] – [25] / [14] / [19] / [20] [26 V]	s. page 28
3.000	1		Pressure relief block	UPE 2–1X/SDB– [1] [2] [26 V]	s. page 28
or 3.000	1		Pressure relief block with circulation valve	UPE 2-1X/SDBU– [1] [2] / [4] [8] [26 V]	s. page 28
3.001	1	00074683	Plug-in connector	Colour, grey	
or 3.000	1		Pressure sequence block	UPE 2–1X/SDA– [23] / [24] – [25] / [14] / [26 V]	s. page 29
or 3.000	1		Connection block with electrical unloading	UPE 2-1X/WAE– [1] [2] [4] [8] [26 V]	s. page 19
3.001	1	00074683	Plug-in connector	Colour, grey	

Futher details in clear text.
For guidelines regarding ordering **see pages 51 to 55**

Supplements to RE sheet

Ordering details

Note regarding ordering:
To ensure trouble-free order processing, it is necessary to define the control block sequence (Pos. 3.100 to 3.900, see also page 26). At this item would you please enter the Pos. and in the 1st column the quantity.
This order process has, dependent on the design, to be repeated up to 10 times.

Pos.	Qty.	Material No.	Component description	Type code	RE sheet
3.X00	1		Pressure reducing block	UPE 2–1X/SDR– [16] / [17] / [14] / [26 V]	s. page 29
3.X00	1		Circulation block with isolator valve	UPE 2–1X/SUA– [26 V]	s. page 29
3.X00	1		Circulation block	UPE 2–1X/SU– [4] [8] / [7] [26 V]	s. page 29
3.X01	1	00074683	Plug-in connector	Colour, grey	
3.X00	1		Control block P	UPE 2–1X/SP– [4] [8] / [7] [26 V]	s. page 30
3.X01	1	00074683	Plug-in connector	Colour, grey	
3.X00	1		Control block P – A	UPE 2–1X/SPA2– [4] [10] / [12] [8] / [7] [26 V]	s. page 30
3.X01	1	00074683	Plug-in connector	Colour, grey	
3.X02	0 or 1	00074684	Plug-in connector	Colour, black	
3.X00	1		Control block A – T	UPE 2–1X/SAT2– [4] [8] / [7] [26 V]	s. page 31
3.X01	1	00074683	Plug-in connector	Colour, grey	
3.X00	1		Control block P – A – T	UPE 2–1X/SPAT2– [4] [11] / [12] / [14] [8] / [7] [26 V]	s. page 31
3.X01	2 or 3	00074684	Plug-in connector	Colour, black	
3.X00	1		Control block P – A – T with pressure reducing valve	UPE 2–1X/SPAT2DB– [1] [2] / [14] [4] [8] [26 V]	s. page 32
3.X01	2	00074683	Plug-in connector	Colour, grey	
3.X00	1		Control block B – A – T with pressure relief valve	UPE 2–1X/SBAT2DB– [1] [2] / [4] / [10] [8] [26 V]	s. page 32
3.X01	1 or 2	00074683	Plug-in connector	Farbe, grau	
3.X00	1		Control block P–B–A–T with pressure relief valve	UPE 2–1X/SPBAT2DB– [1] [2] / [4] / [10] [8] [26 V]	s. page 33
3.X01	1 or 2	00074683	Plug-in connector	Colour, grey	

Please enter the quantity required at the relevant Pos.!

Pos.	Qty.	Material No.	Component description	Type code	RE sheet
3.X00	1		Control block P – A	UPE 2–1X/SPA3– [5] [11] / [12] / [14] [8] / [7] [26 V]	s. pgs. 33 and 34
3.X01	1	00074683	Plug-in connector	Colour, grey	
3.X02	0 or 1	00074684	Plug-in connector	Colour, black	
3.X00	1		Control block P – A – T with pressure relief valve	UPE 2–1X/SPAT3DB– [1] [2] [5] [11] / [14] [8] [26 V]	s. page 34
3.X01	1	00074683	Plug-in connector	Colour, grey	
3.X02	0 or 1	00074684	Plug-in connector	Colour, black	

Further details in clear text.
For guidelines regarding the ordering details [1 - 26] **see pages 51 to 55**

[ ] Supplements to Re sheet

Ordering details

Please enter the quantity required at the relevant Pos.!

Pos.	Qty.	Material No.	Component description	Type code	RE sheet
3.X00	1		Control block AB	UPE 2–1X/SAB4– [6] [13] / [12] / [8] / [7] [26] V	s. page 35
3.X01	1	00074683	Plug-in connector	Valve side a, colour, grey	
3.X02	1	00074684	Plug-in connector	Valve side b, colour, black	
3.X00	1		Control block with check valve	UPE 2–1X/SR– [21] / [10] / [12] / [14] / [15] [26] V	s. page 36
3.X01	1	00074684	Plug-in connector	Colour, black	
3.X00	1		Control block with pressure switch	UPE 2–1X/SD– [9] [11] / [12] / [14] / [15] / [26] V	s. page 36
3.X01	1 or 2	00074684	Plug-in connector	Colour, black	
4.000	1		End block	UPE 2–1X/WSE– [22] [26] V	s. page 37
or					
4.000	1		End block with pressure switch	UPE 2–1X/WSED– [9] [11] / [12] / [14] / [15] / [26] V	s. page 37
4.001	1 or 2	00074684	Plug-in connector	Colour, black	
or					
4.000	1		End block with pressure switch and isolator valve	UPE 2–1X/WSEDA– [9] [11] / [12] / [14] / [15] / [26] V	s. page 38
4.001	1 or 2	00074684	Plug-in connector	Colour, black	
or					
4.000	1		End block with accumulator and isolator valve	UPE 2–1X/SESA– [9] [11] / [12] / [18] [26] V	s. page 39
4.001	1 or 2	00074684	Plug-in connector	Colour, black	
or					
4.000	1		Accumulator safety block	UPE 2–1X/SSB– [1] [3] / [14] / [18] [26] V	s. page 39
5.000	2		S.H.C.S.	M6 x [ ] DIN 912-10.9	
or					
5.000	2		Tie rod	M6 x [ ] DIN 975-10.9	
5.001	2	04001046	Hex. nut	M6–10 DIN 934	
5.002	2	04001047	Lock nut	M6, galvanized	

Note regarding ordering:
To ensure trouble-free order processing it is necessary to define the control block sequence (Pos. 3.100 to 3.900, also see page 26). At this item would you please enter to Pos. and in the 1st. column the quantity.

3.X00	1		Pressure reducing block	UPE 2–1X/SDRP1– [16] / [17] / [14] / [26] V	s. page 40
3.X00	1		Circulation block with isolator valve and P1 port	UPE 2–1X/SUAP1– [26] V	s. page 40
3.X00	1		Circulation block with P1 port	UPE 2–1X/SUP1– [4] [8] / [7] [26] V	s. page 40
3.X01	1	00074683	Plug-in connector	Colour, grey	
3.X00	1		Control block P with P1 port	UPE 2–1X/SPP1– [4] [8] / [7] [26] V	s. page 40
3.X01	1	00074683	Plug-in connector	Colour, grey	

Further details in clear text. For guidelines regarding the ordering details [1 - 26] see pages 51 to 55 [ ] Supplements to RE sheet

Poppet valve model, type „S“, ordering details

Please enter the quantity required at the relevant Pos.!

Pos.	Qty.	Material No.	Component description	Type code	RE sheet
3.X00	1		Control block P – A with P1 port	UPE 2–1X/SPA3P1– [5] [11] / [12] / [14] [8] / [7] [26 V]	s. page 41
3.X01	1	00074683	Plug-in connector	Colour, grey	
3.X02	0 or 1	00074684	Plug-in connector	Colour, black	
3.X00	1		Control block AB with P1 port	UPE 2–1X/SAB4P1– [6] [13] / [12] / [8] / [7] [26 V]	s. page 42
3.X01	1	00074683	Plug-in connector	Valve side a, colour, grey	
3.X02	1	00074684	Plug-in connector	Valve side b, colour, black	
3.X00	1		Control block with pressure switch and P1 port	UPE 2–1X/SDP1– [9] [11] / [12] / [14] / [15] / [26 V]	s. page 43
3.X01	1 or 2	00074684	Plug-in connector	Colour, black	
3.X00	1		Sandwich block with P1 port blocked	UPE 2–1X/SZP1– [26 V]	s. page 43
4.000	1		End block with P1 port	UPE 2–1X/WSEP1– [22] [26 V]	s. page 43
or					
4.000	1		End block with pressure switch and P1 port	UPE 2–1X/WSEDP1– [9] [11] / [12] / [14] / [15] / [26 V]	s. page 44
4.001	1 or 2	00074684	Plug-in connector	Colour, black	
or					
4.000	1		End block with pressure switch, isolator valve and P1 port	UPE 2–1X/WSEDAP1– [9] [11] / [12] / [14] / [15] / [26 V]	s. page 45
4.001	1 or 2	00074684	Plug-in connector	Colour, black	
or					
4.000	1		End block with accumulator, isolator valve and P1 port	UPE 2–1X/SESAP1– [9] [11] / [12] / [18] [26 V]	s. page 46
4.001	1 or 2	00074684	Plug-in connector	Colour, black	
or					
4.000	1		Accumulator safety block with P1 port	UPE 2–1X/SSBP1– [1] [3] / [14] / [18] [26 V]	s. page 46
5.000	2		S.H.C.S.	M6 x [ ] DIN 912-10.9	
or					
5.000	2		Tie rod	M6 x [ ] DIN 975-10.9	
5.001	2	04001046	Hex. nut	M6–10 DIN 934	
5.002	2	04001047	Lock nut	M6, galvanized	

Further details in clear text.
For guidelines regarding the ordering details [1 - 26] **see pages 51 to 55**

[ ] Supplements to RE sheet

Modules

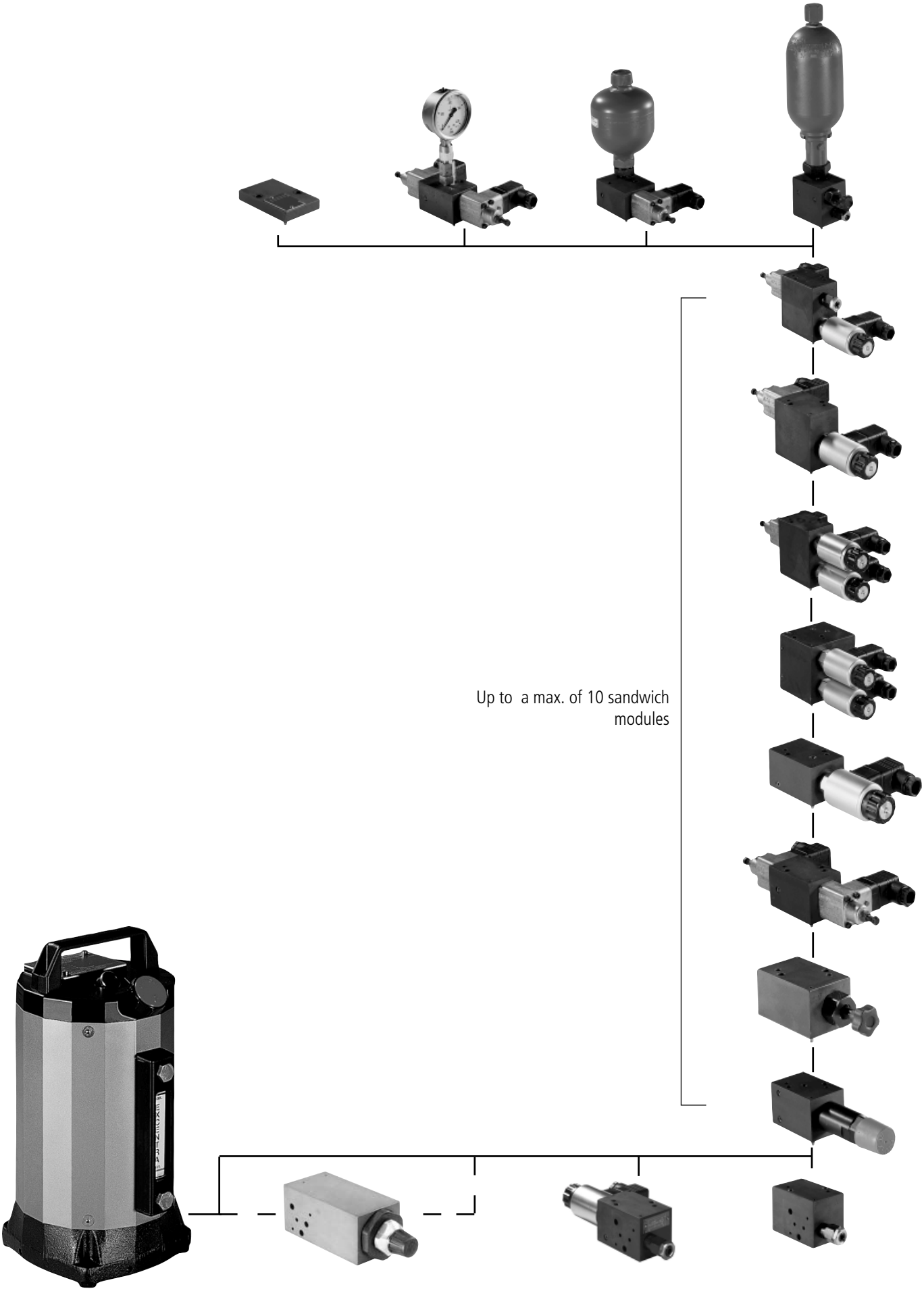

Filter block, type „F06“ (max. flow q_{vmax} = 6 L/min)

Symbol

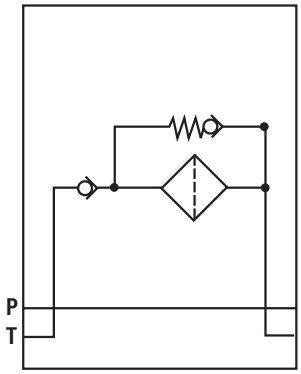

Unit dimensions **Dim. Z = 55 mm**

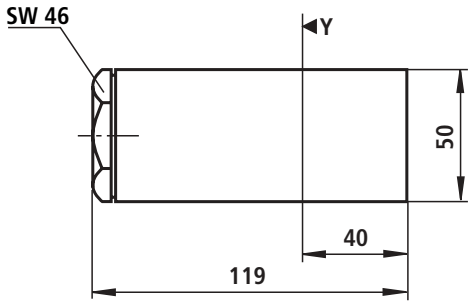

Spare part: Filter element 10 µm Material No. **00992672**

Filter block with pressure relief valve, type „F06DB“ (max. flow q_{vmax} = 6 L/min)

Symbol

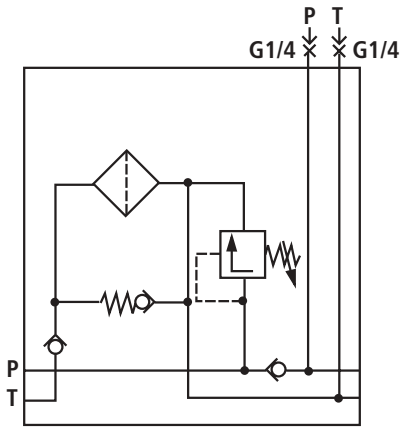

Unit dimensions **Dim. Z = 55 mm**

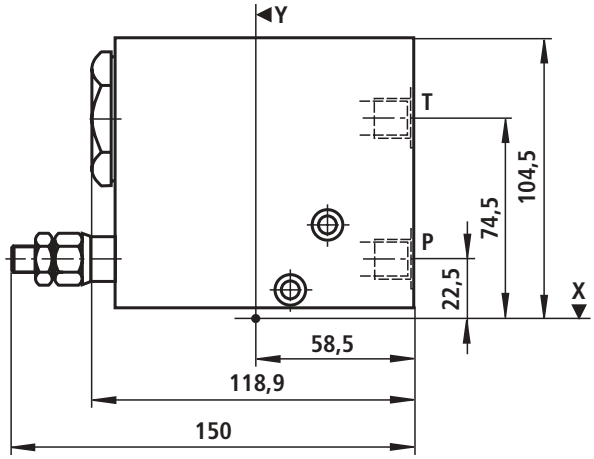

Spare part: Filter element 10 µm Material No. **00992672**

Filter block with pressure relief valve, type „F30DB“ (max. flow q_{vmax} = 30 L/min)

Symbol

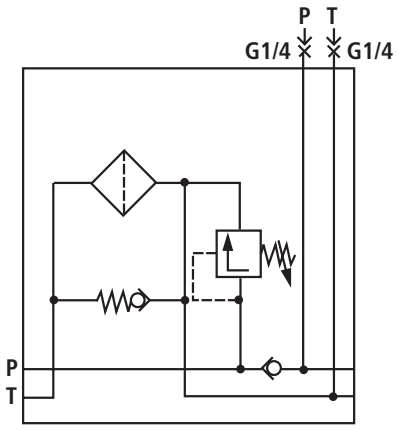

Unit dimensions **Dim. Z = 140 mm**

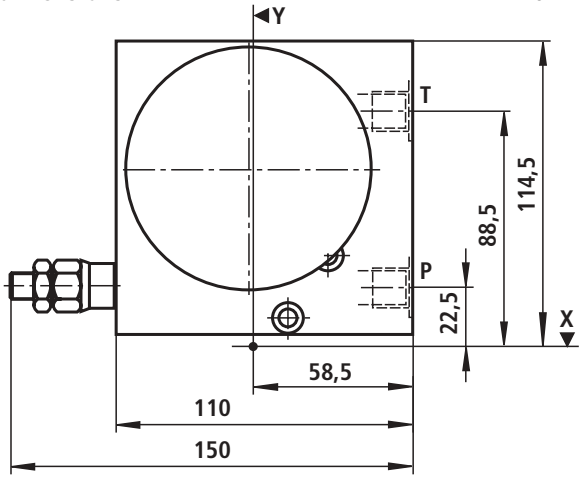

Spare part: Filter element 10 µm Material No. **00994483**
Assembly tool: Strap wrench Material No. **04001048**

Poppet valve modul, type „S“ (Dimensions in mm)

Filter block with pressure relief valve and circulation valve, type „F30DBU“

Symbol

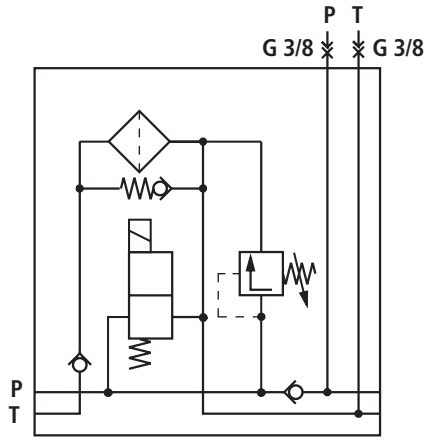

Unit dimensions **Dim. Z = 140 mm**

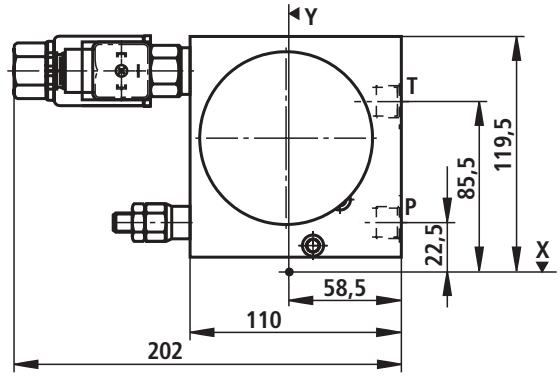

Spare part: Filter element 10 mm Material No. **00994483;** Assembly tool: Strap wrench Material No. **04001048**

Filter block with pressure sequence valve, type „F20DA“ (see characteristic curves on page 55, suitable for use with flows $q_v \geq 2$ L/min)

Symbol

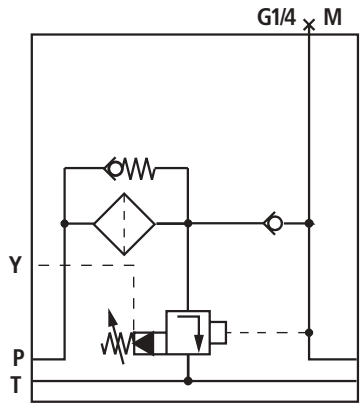

Unit dimensions **Dim. Z = 143 mm**

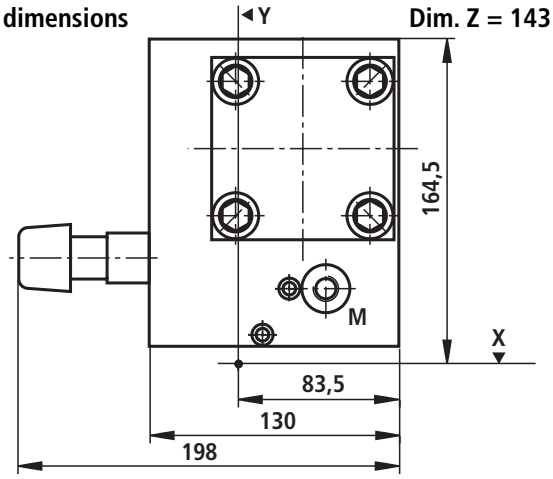

Pressure relief block, type „SDB“

Symbol

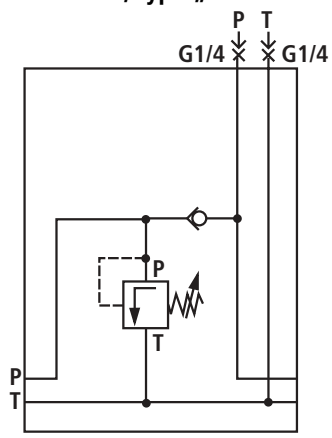

Unit dimensions **Dim. Z = 45 mm**

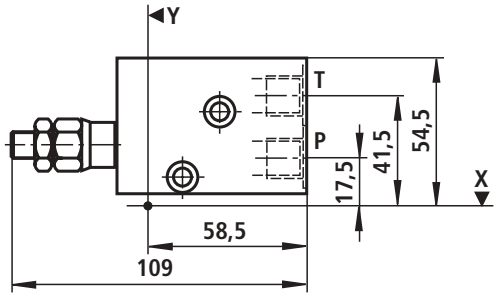

Pressure relief valve with by-pass valve, type „SDBU“

Symbol

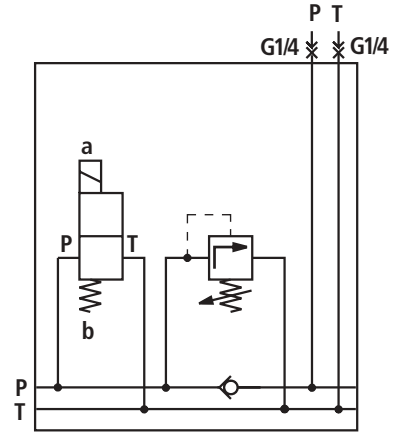

Unit dimensions **Dim. Z = 45 mm**

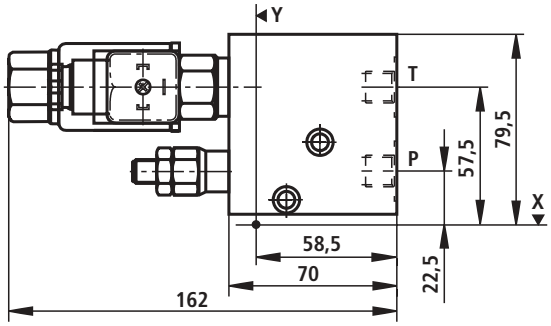

Pressure sequence block, type „SDA“ (see characteristic curves on page 55, suitable for use with flows $q_v \geq 2$ L/min

Symbol

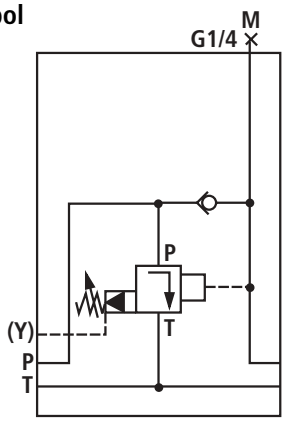

Unit dimensions **Dim. Z = 45 mm**

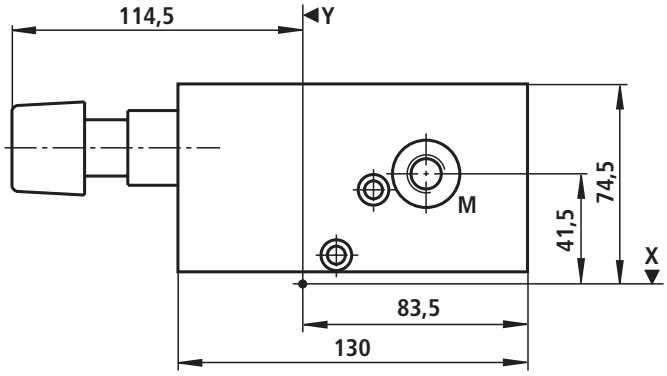

Pressure reducing block, type „SDR“

Symbol

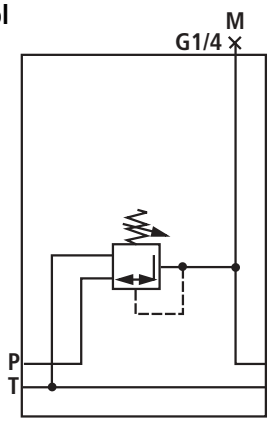

Unit dimensions **Dim. Z = 45 mm**

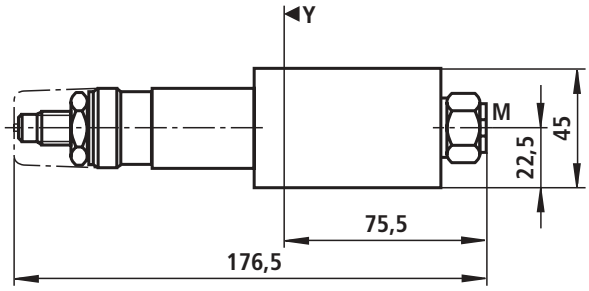

Circulation block with isolator valve, type „SUA“

Symbol

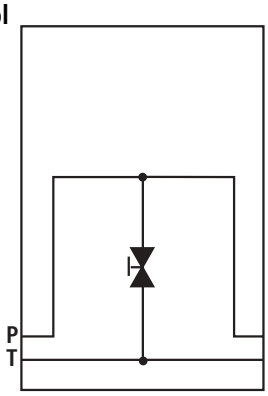

Unit dimensions **Dim. Z = 45 mm**

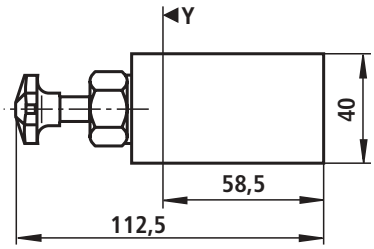

Circulation block, type „SU“

Symbol

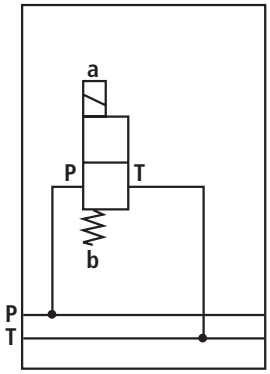

Unit dimensions **Dim. Z = 45 mm**

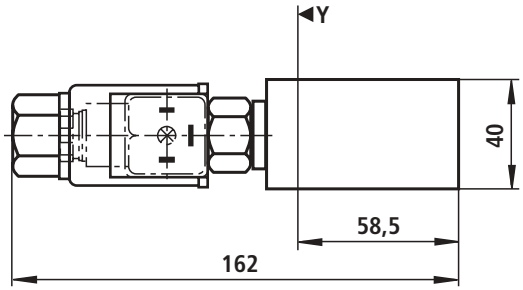

Poppet valve module, type „S“ (Dimensions in mm)

Control block, type „SP“

Symbol

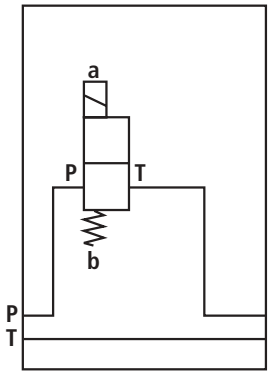

Unit dimensions **Dim. Z = 45 mm**

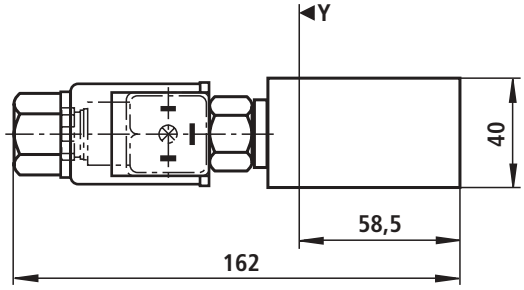

Control block P – A, type „SPA2“

Symbol

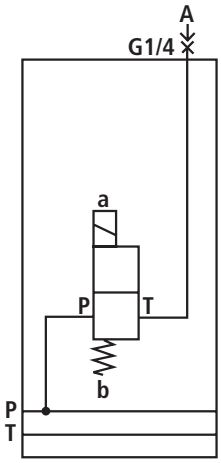

Unit dimensions **Dim. Z = 45 mm**

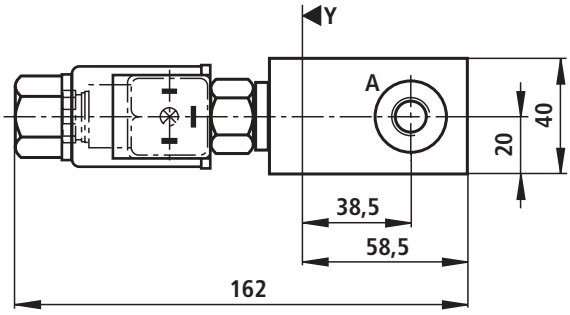

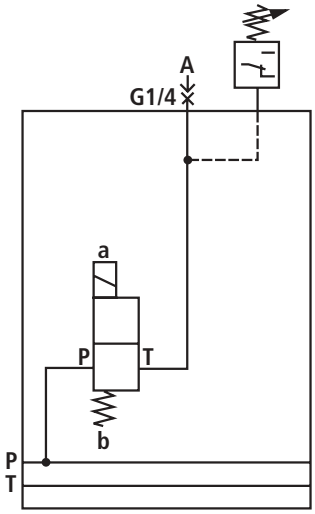

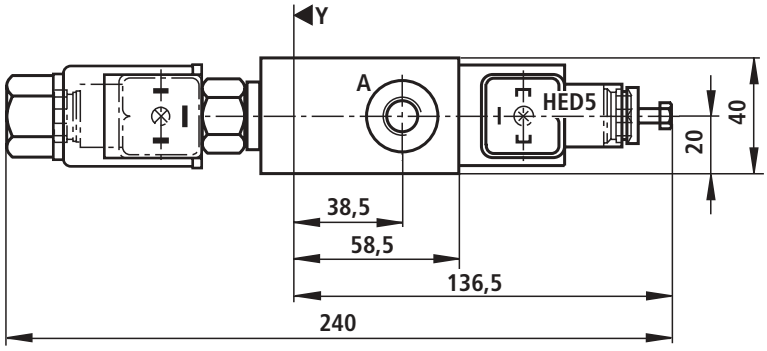

Control block A – T, type „SAT2“

Symbol

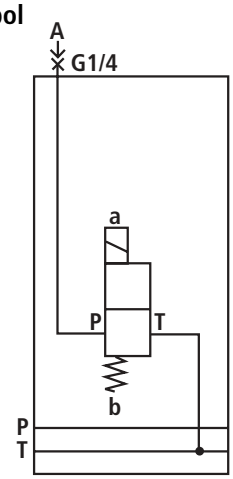

Unit dimensions **Dim. Z = 45 mm**

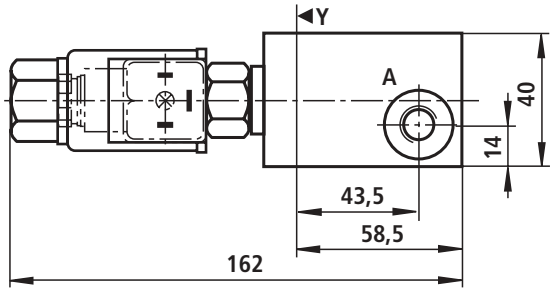

Control block P – A – T, type „SPAT2“

Symbol

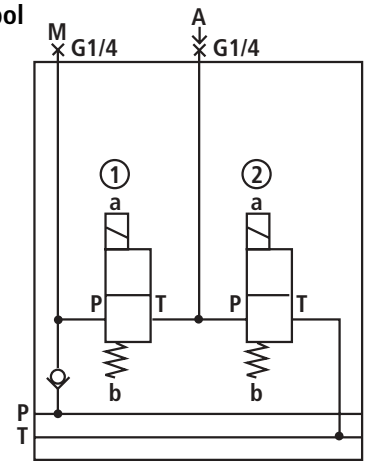

Unit dimensions **Dim. Z = 45 mm**

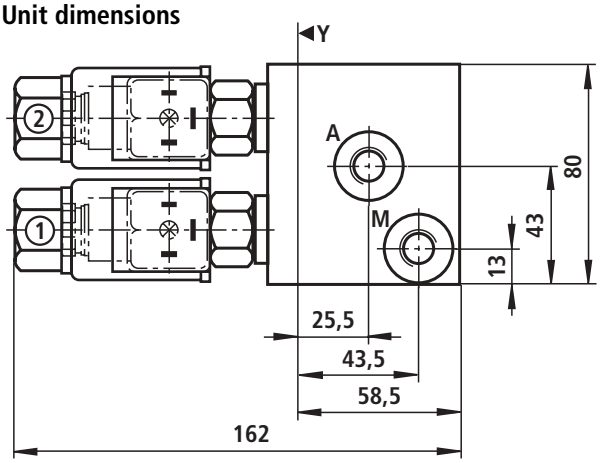

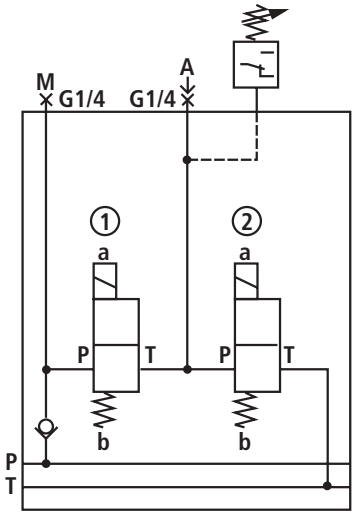

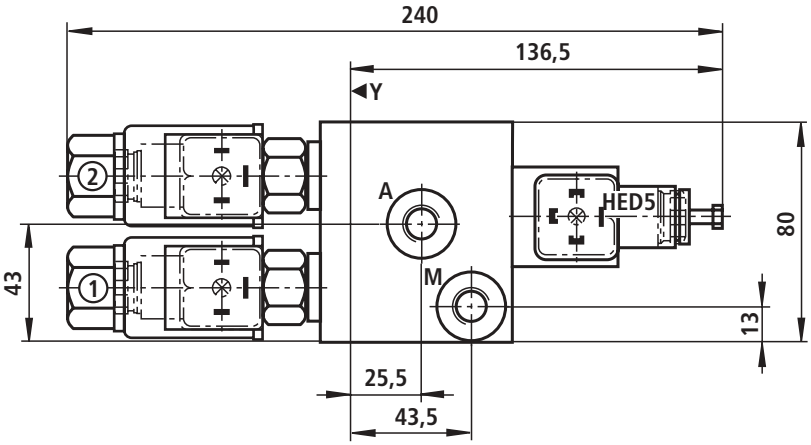

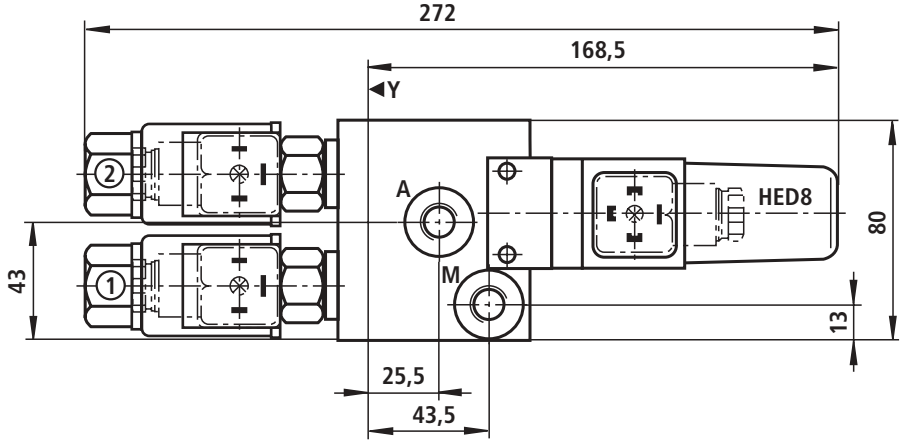

Poppet valve module, type „S“ (Dimensions in mm)

Control block P – A – T with pressure relief valve, type „SPAT2DB“

Symbol

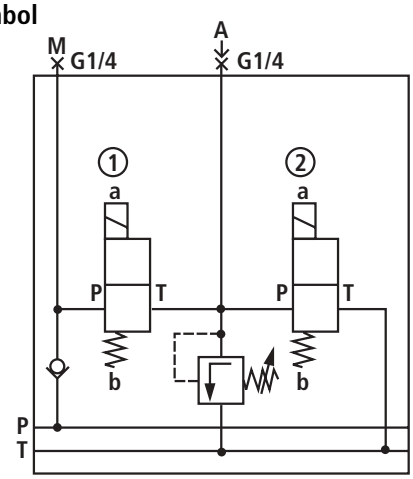

Unit dimensions **Dim. Z = 45 mm**

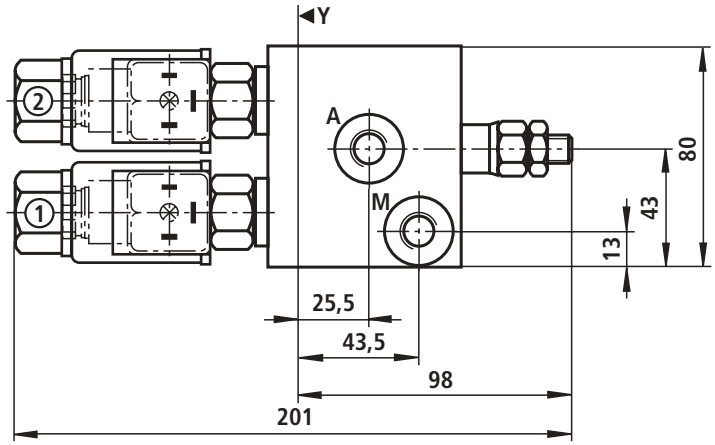

Control block B – A – T with pressure relief valve, type „SBAT2DB“

Symbol

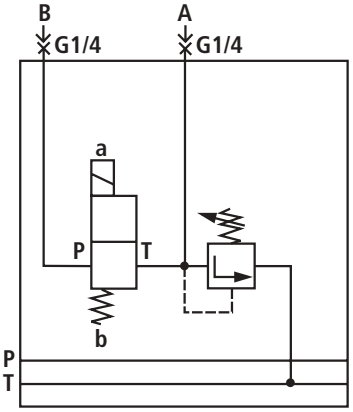

Unit dimensions **Dim. Z = 45 mm**

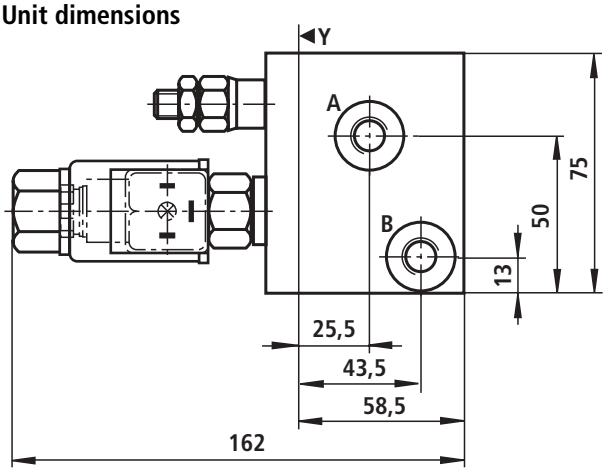

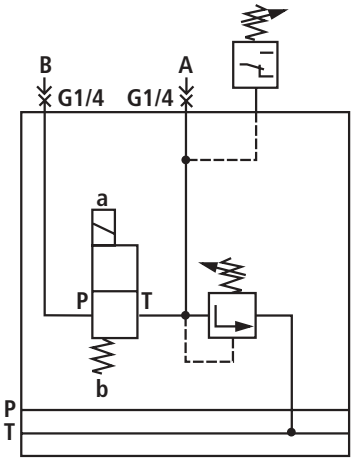

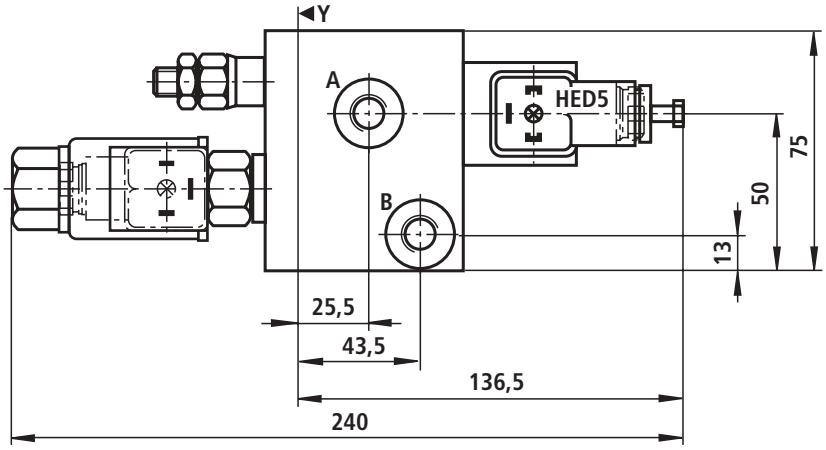

Control block P – B – A – T with pressure relief valve, type „SPBAT2DB“

Symbol

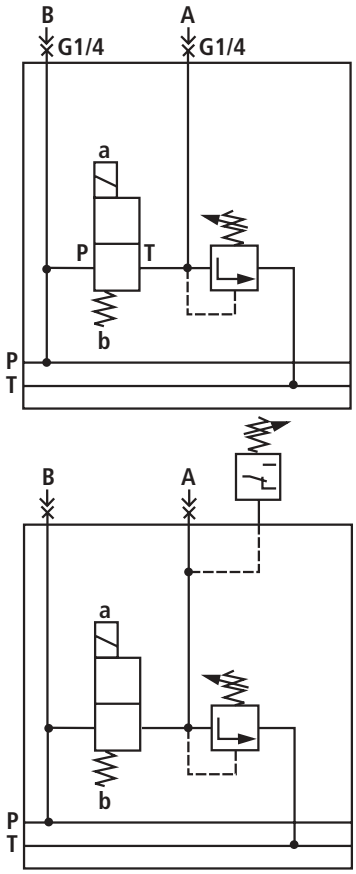

Unit dimensions

Dim. Z = 45 mm

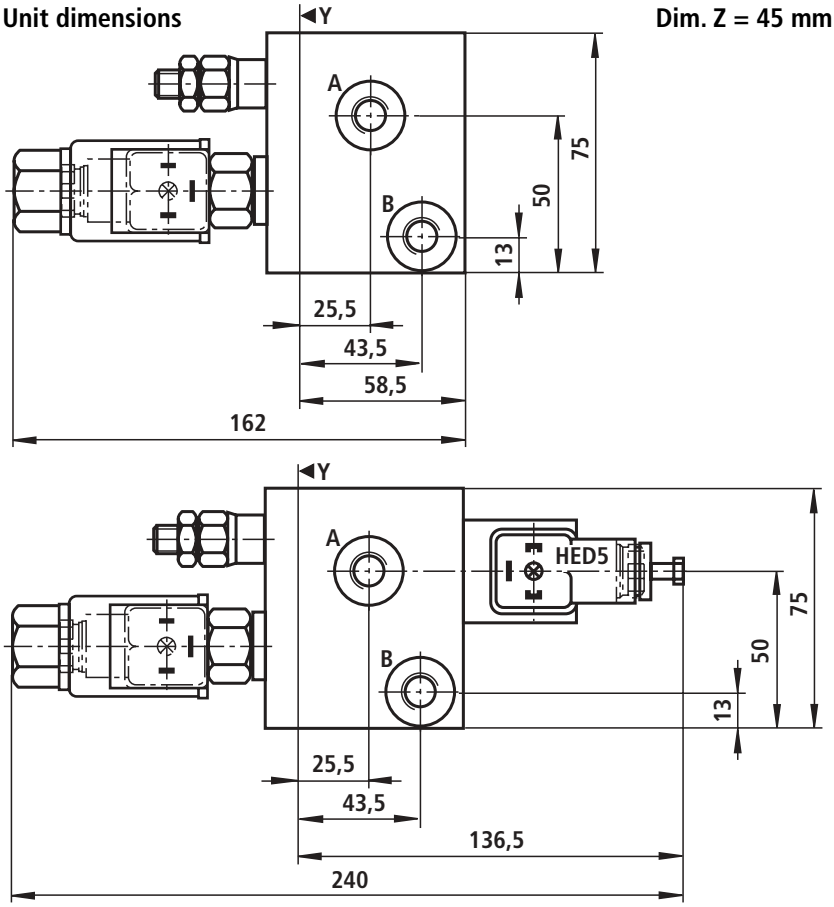

Control block P – A, type„SPA3“

Symbol

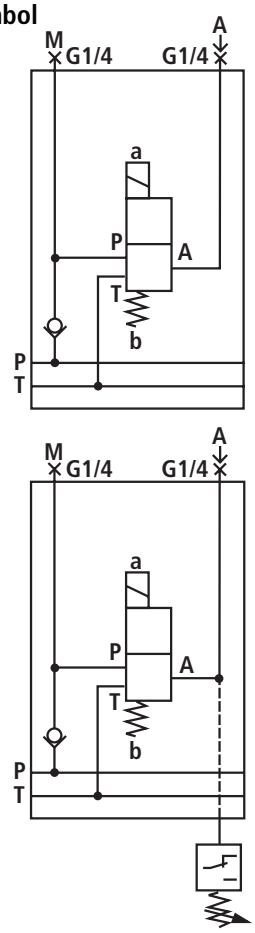

Unit dimensions

Dim. Z = 45 mm

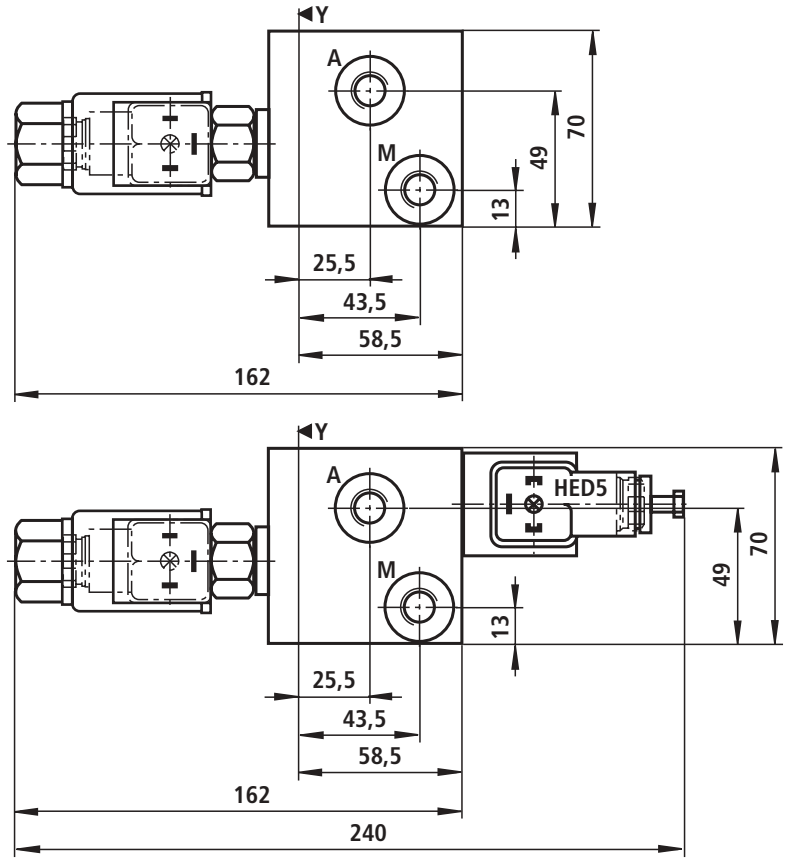

Control block P – A, type „SPA3“

Symbol see page 33

Unit dimensions **Dim. Z = 45 mm**

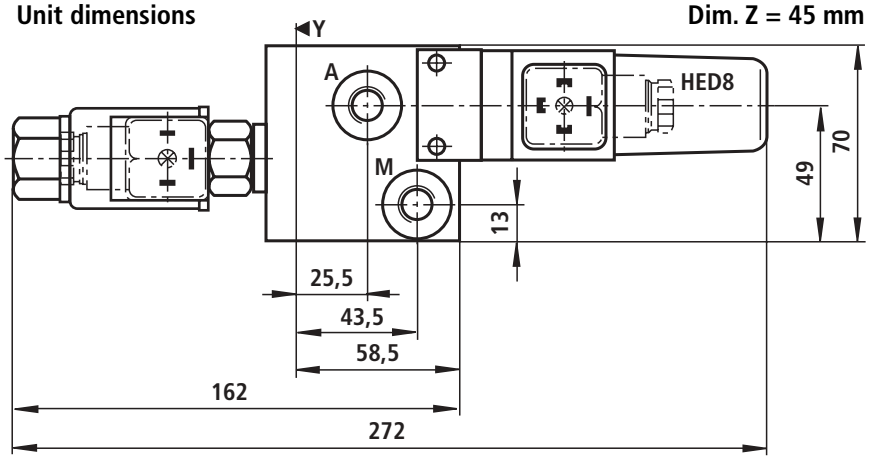

Control block P – A – T with pressure relief valve, type „SPAT3DB“

Symbol

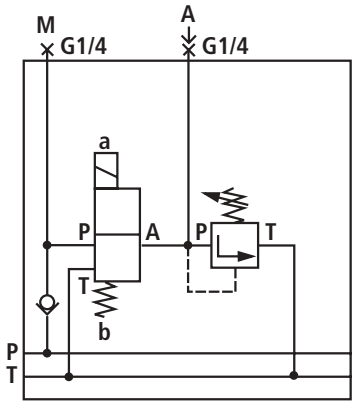

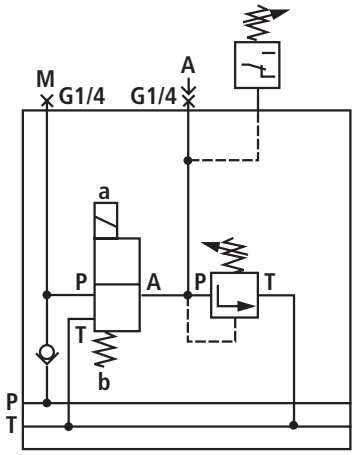

Unit dimensions **Dim. Z = 45 mm**

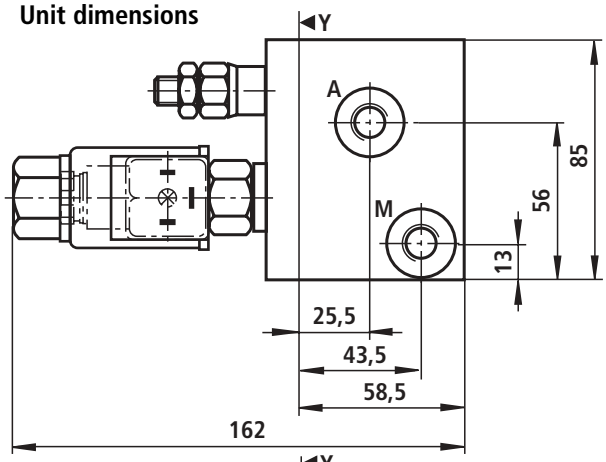

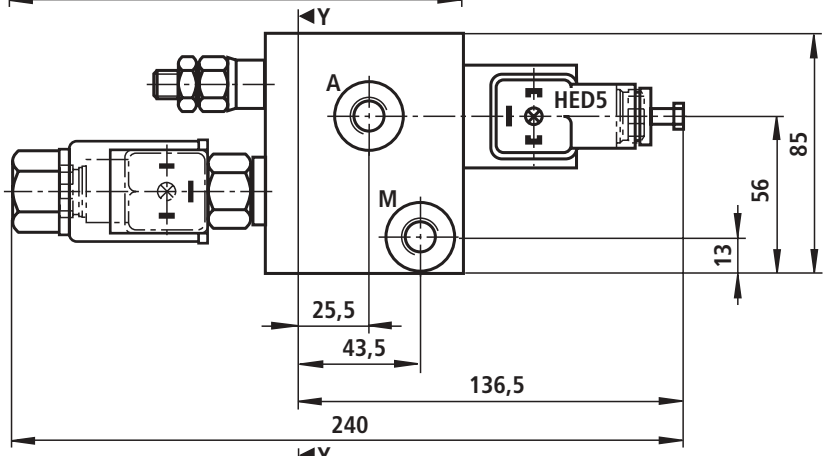

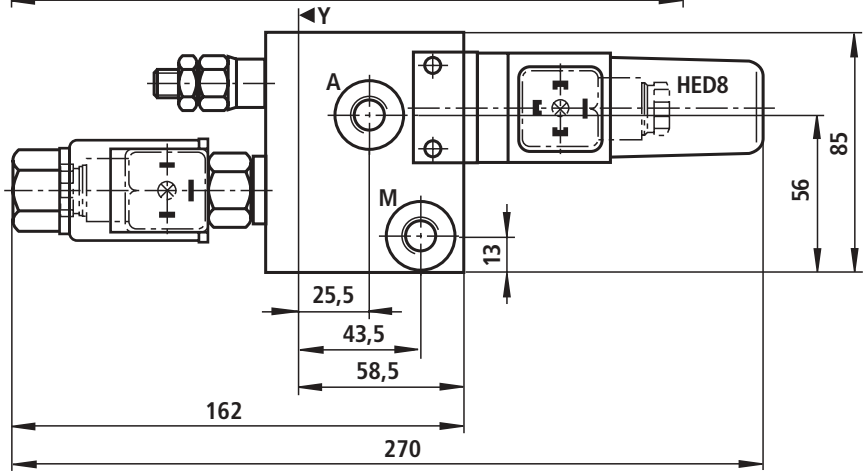

Control block AB, type „SAB4“

Symbol **Unit dimensions** **Dim. Z = 70 mm**

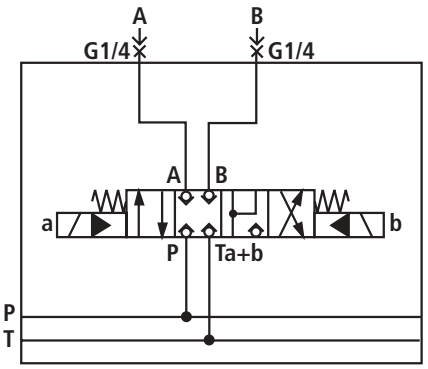

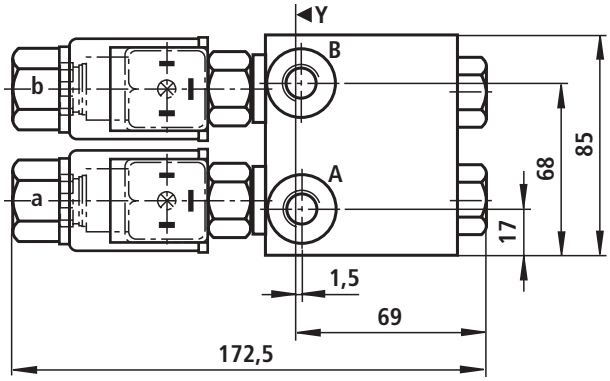

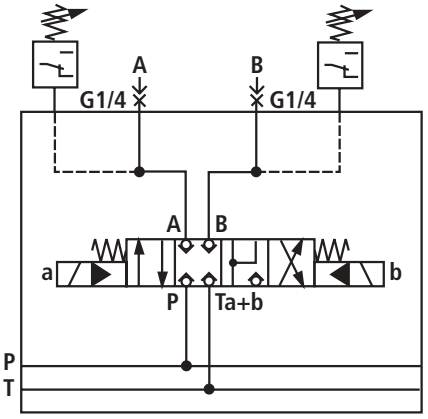

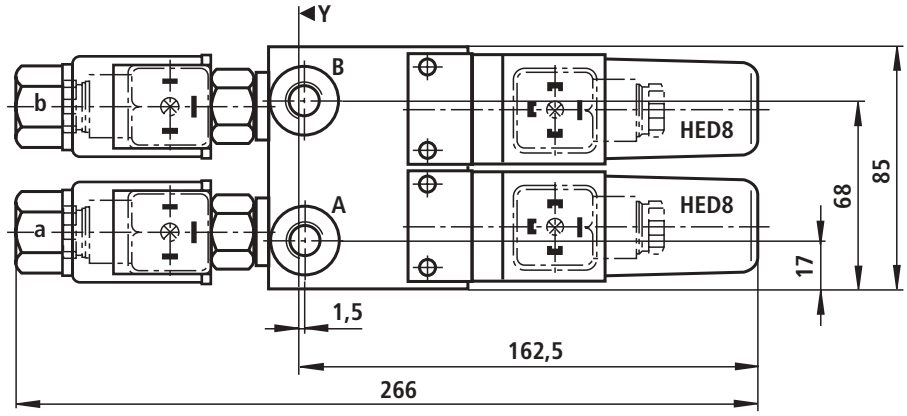

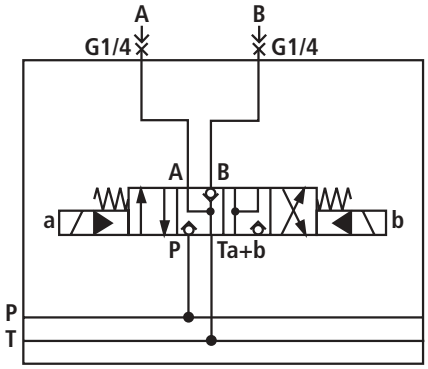

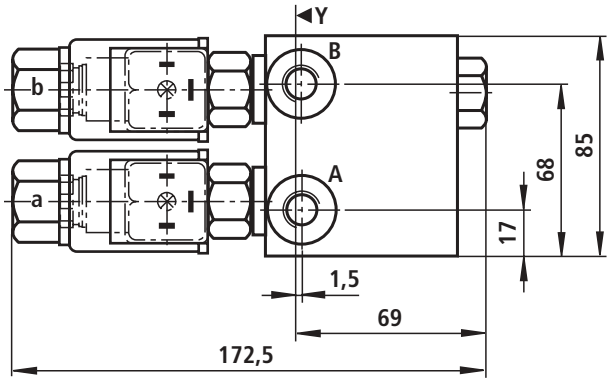

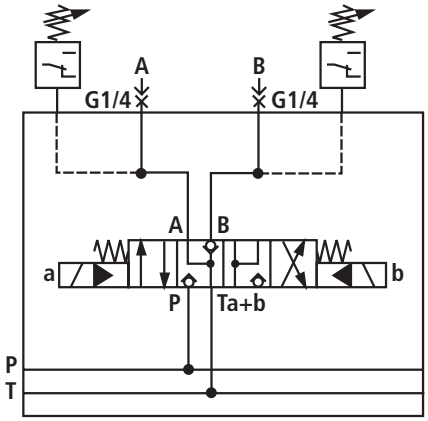

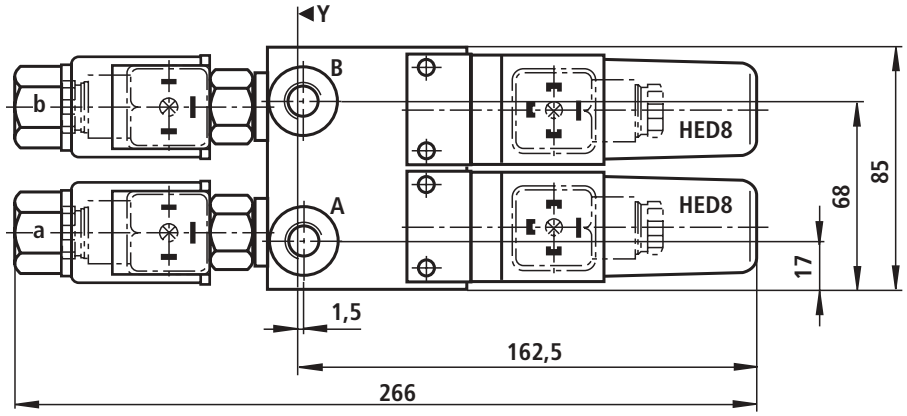

Poppet valve module, type „S“ (Dimensions in mm)

Control block with check valve, type „SR“

Symbol

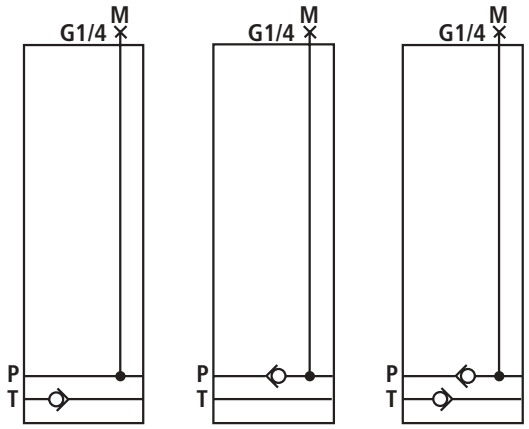

Unit dimensions **Dim. Z = 45 mm**

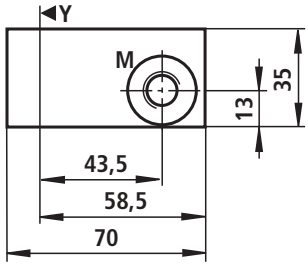

Symbol

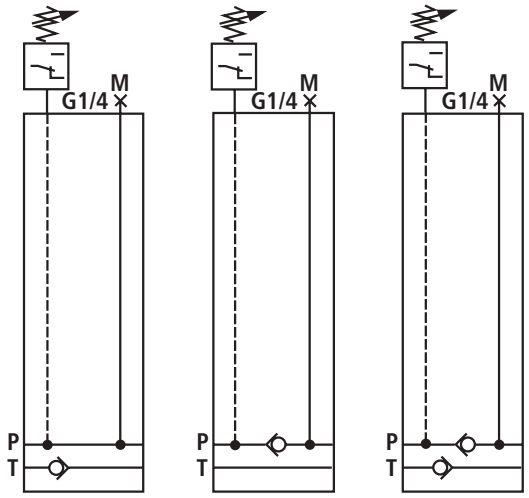

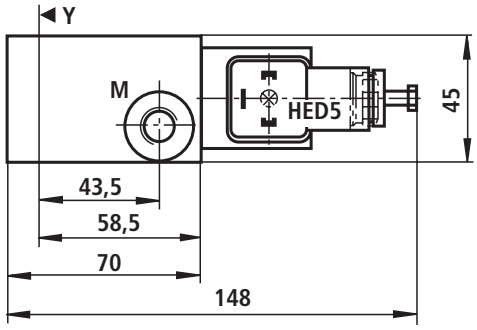

Control block with pressure switch, type „SD“

Symbol

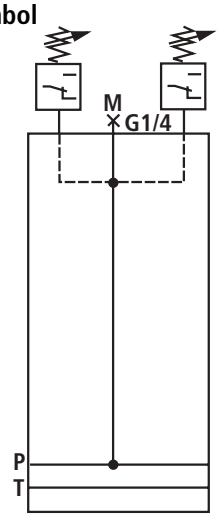

Unit dimensions **Dim. Z = 45 mm**

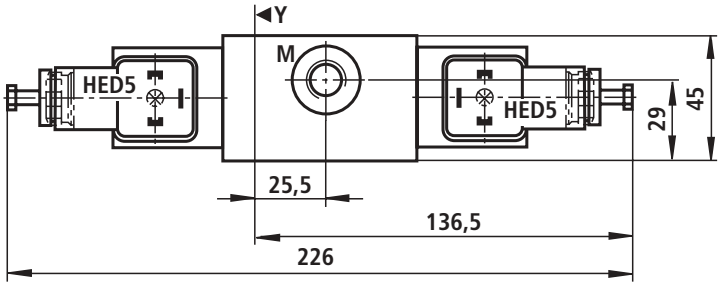

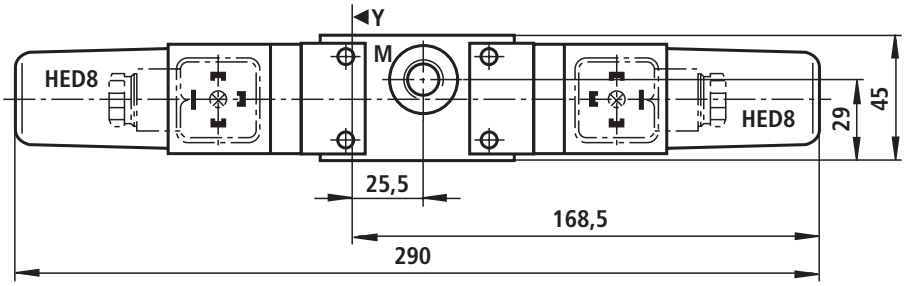

Poppet valve module, type „S“ (Dimensions in mm)

End block, type „WSE“

Symbol **Unit dimensions** **Dim. Z = 45 mm**

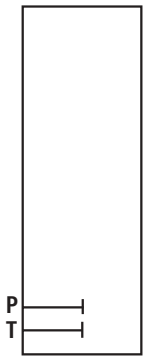

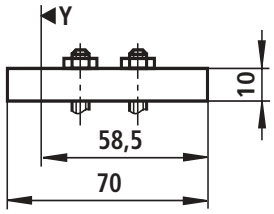

Symbol **Unit dimensions** **Dim. Z = 45 mm**

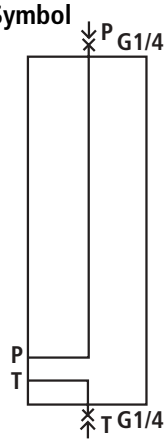

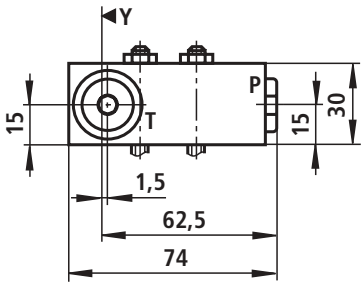

End block with pressure switch, type „WSED“

Symbol **Unit dimensions** **Dim. Z = 45 mm**

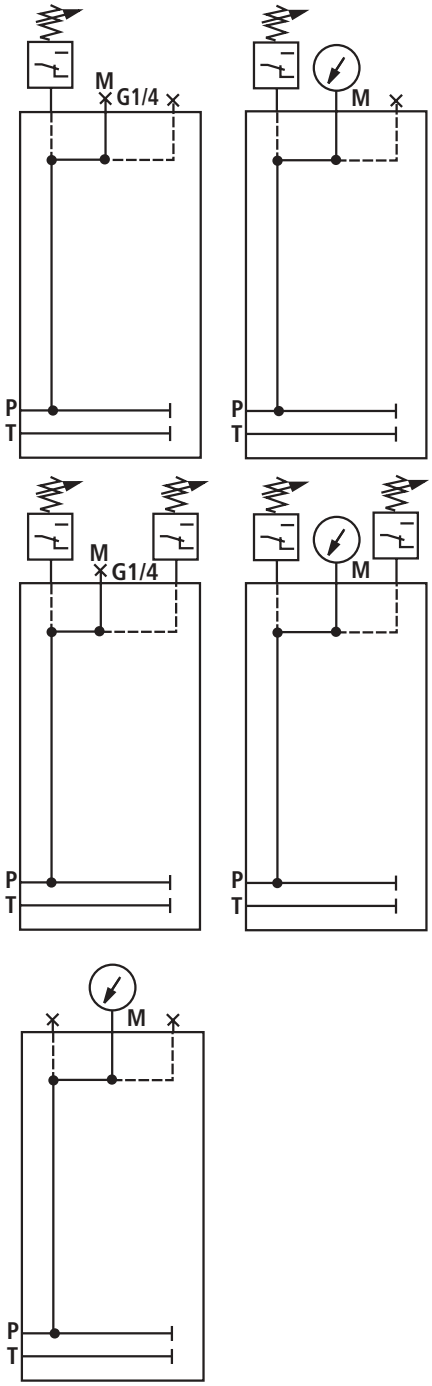

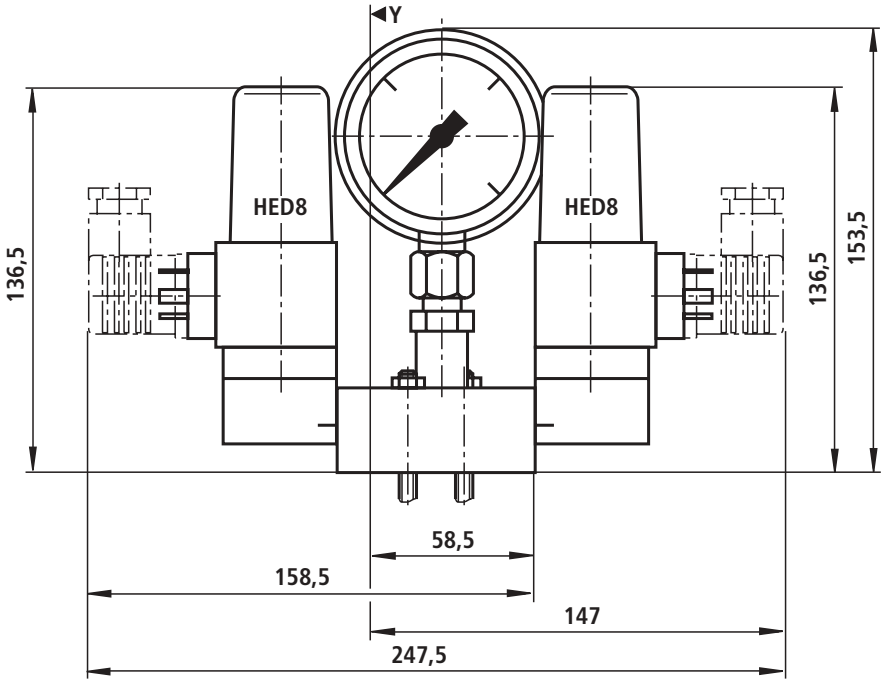

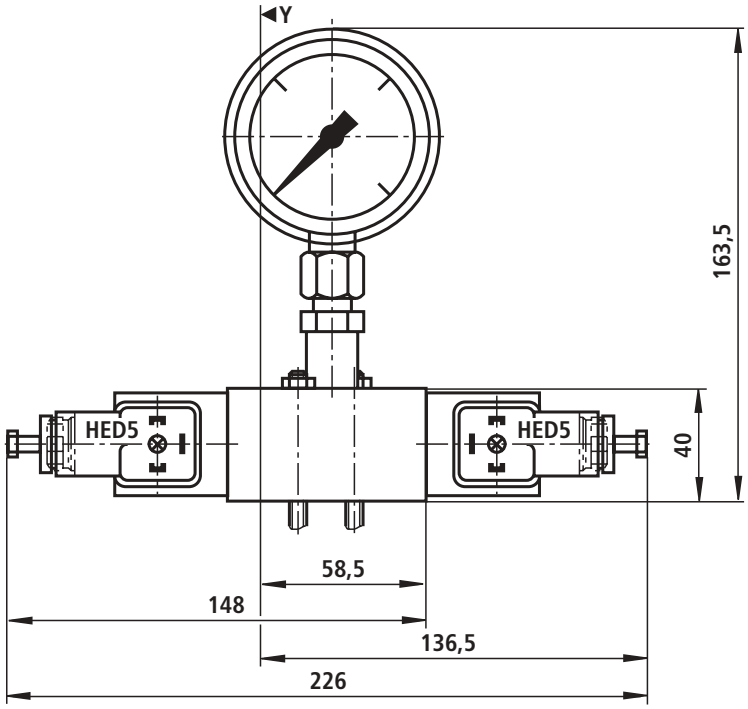

Poppet valve module, type „S“ (Dimensions in mm)

End block with pressure switch and isolator valve, type „WSEDA“

Symbol

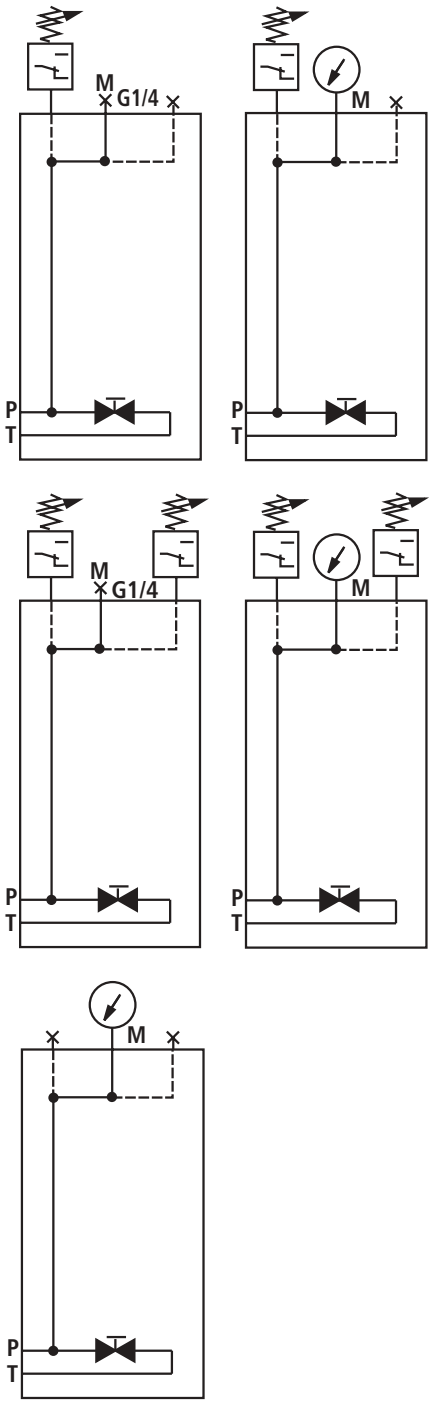

Unit dimensions **Dim. Z = 55 mm**

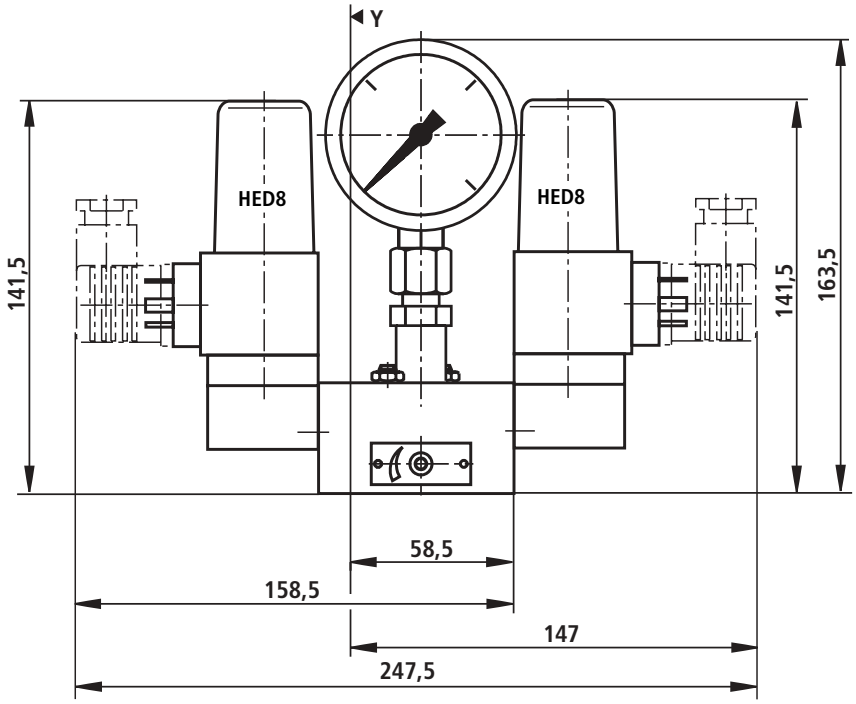

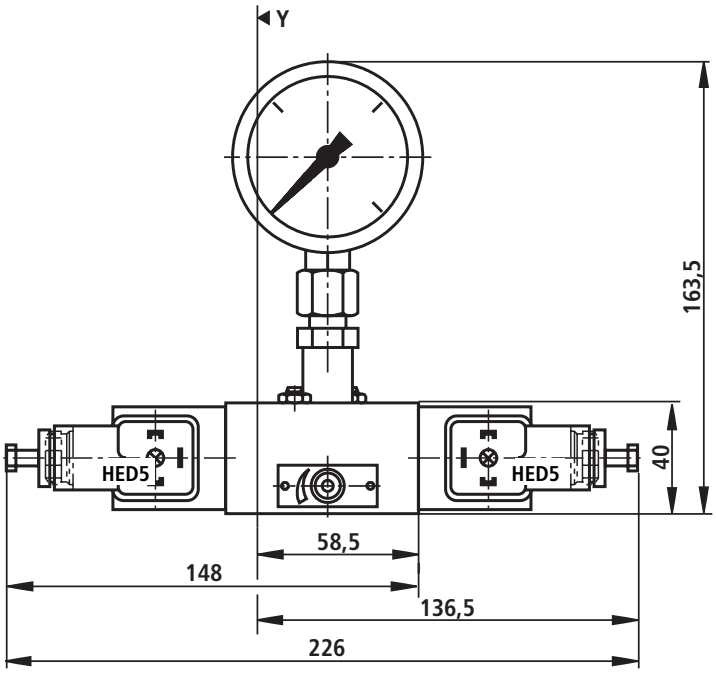

End block with accumulator and isolator valve, type „SESA“

Symbol

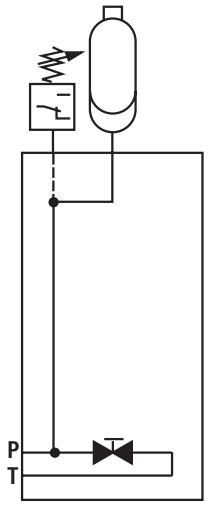

Unit dimensions **Dim. Z_{max} = 98,5 mm**

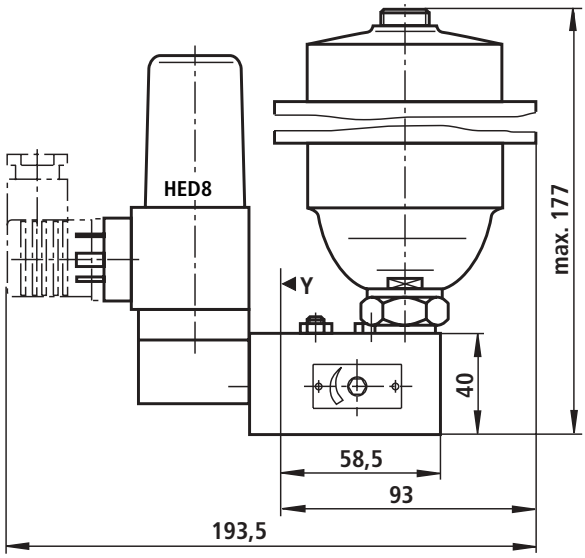

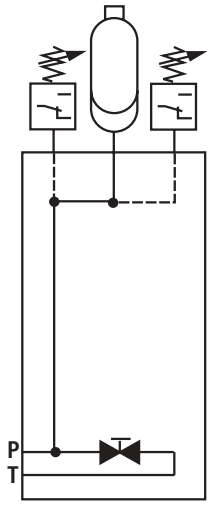

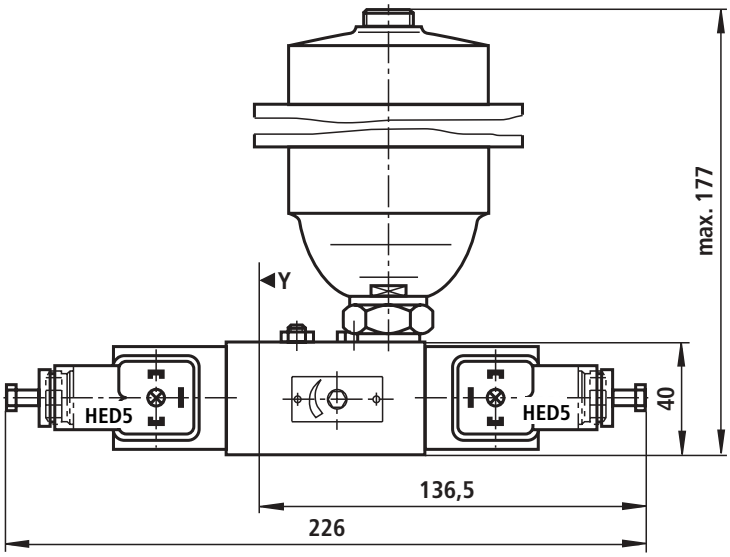

Accumulator safety block, type „SSB“

Symbol

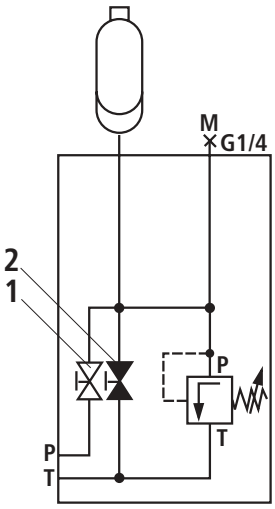

Unit dimensions **Dim. Z_{max} = 88,5 mm**

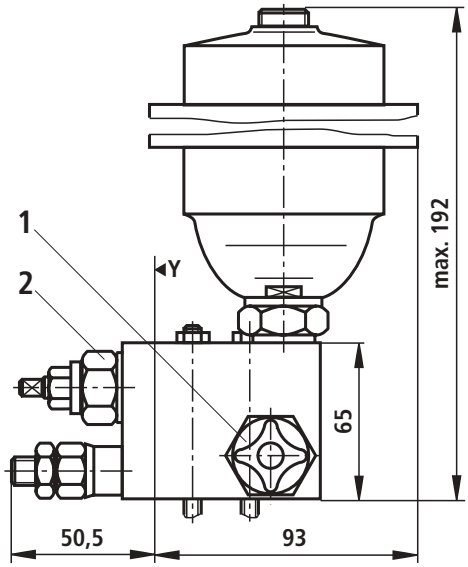

Pressure reducing block with P1 port, type „SDRP1“

Symbol

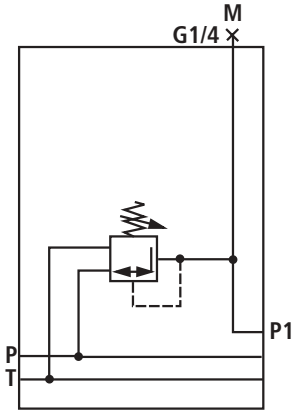

Unit dimensions **Dim. Z = 45 mm**

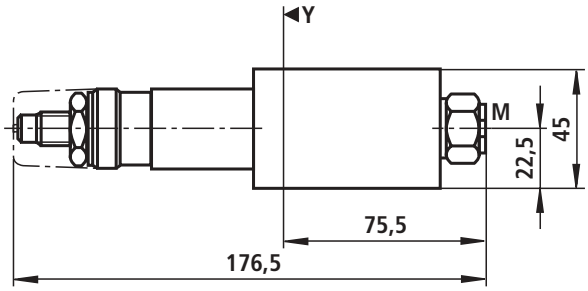

By-pass block with isolator valve and P1 port, type „SUAP1“

Symbol

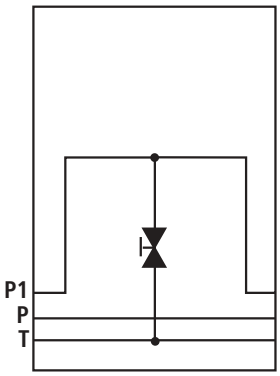

Unit dimensions **Dim. Z = 45 mm**

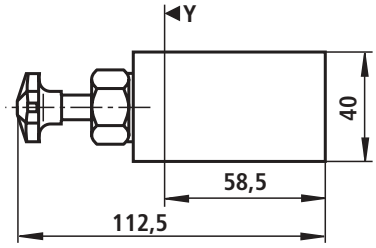

By-pass block with P1 port, type „SUP1“

Symbol

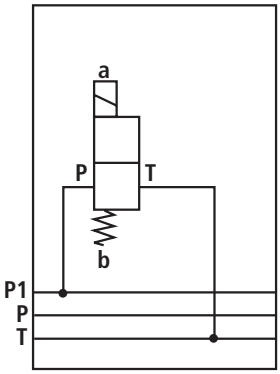

Unit dimensions **Dim. Z = 45 mm**

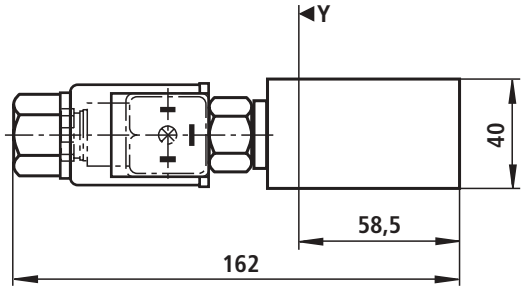

Control block P with P1 port, type „SPP1“

Symbol

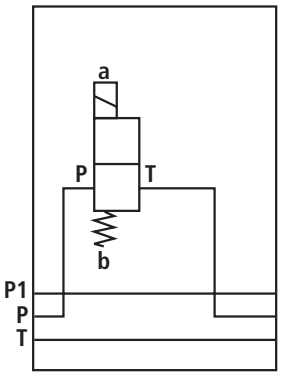

Unit dimensions **Dim. Z = 45 mm**

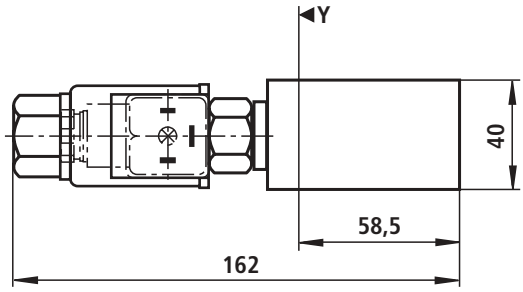

Poppet valve module, type „S“ with additional P1 port (Dimensions in mm)

Control block P–A with P1 port, type „SPA3P1“

Symbol

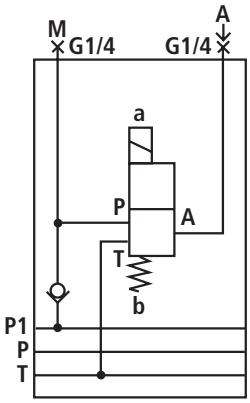

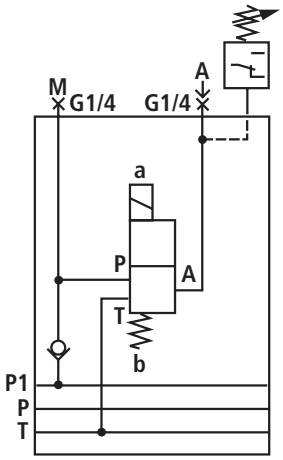

Unit dimensions **Dim. Z = 45 mm**

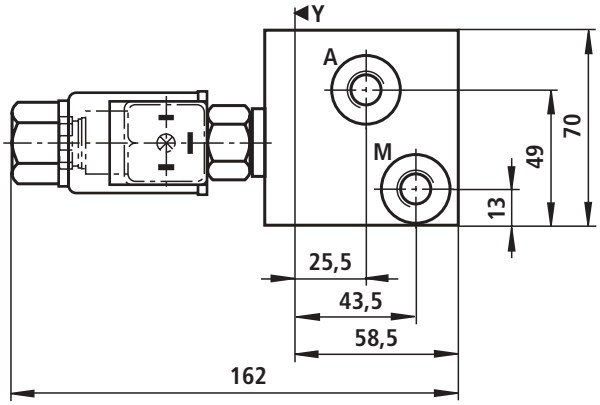

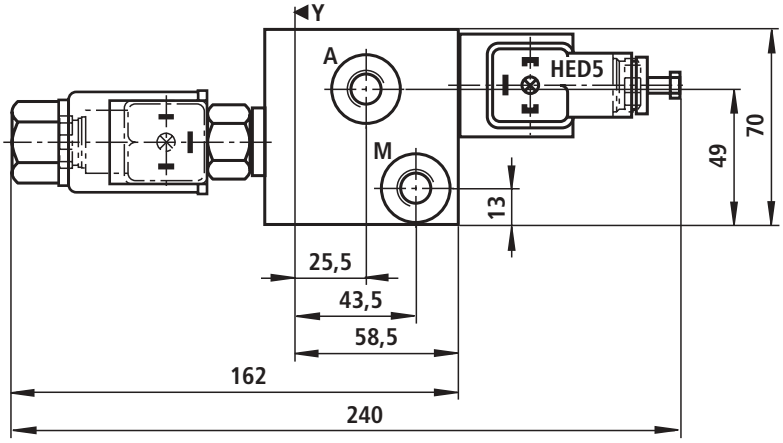

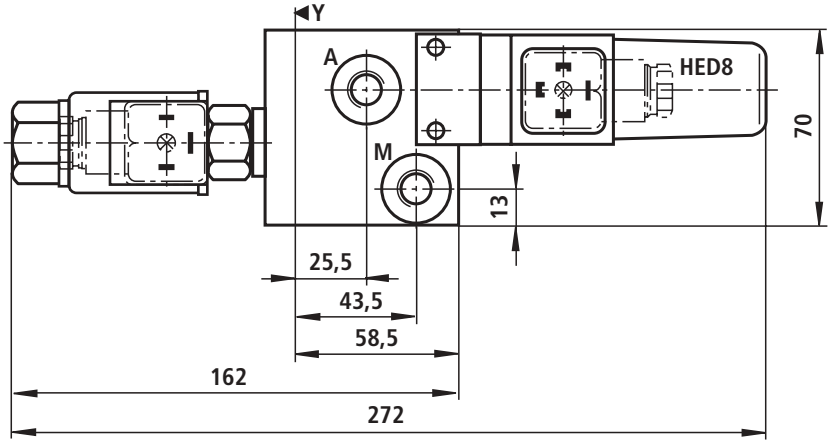

Poppet valve module, type „S“ with additional P1 port (Dimensions in mm)

Control block AB with P1 port, type „SAB4P1“

Symbol **Unit dimensions** **Dim. Z = 70 mm**

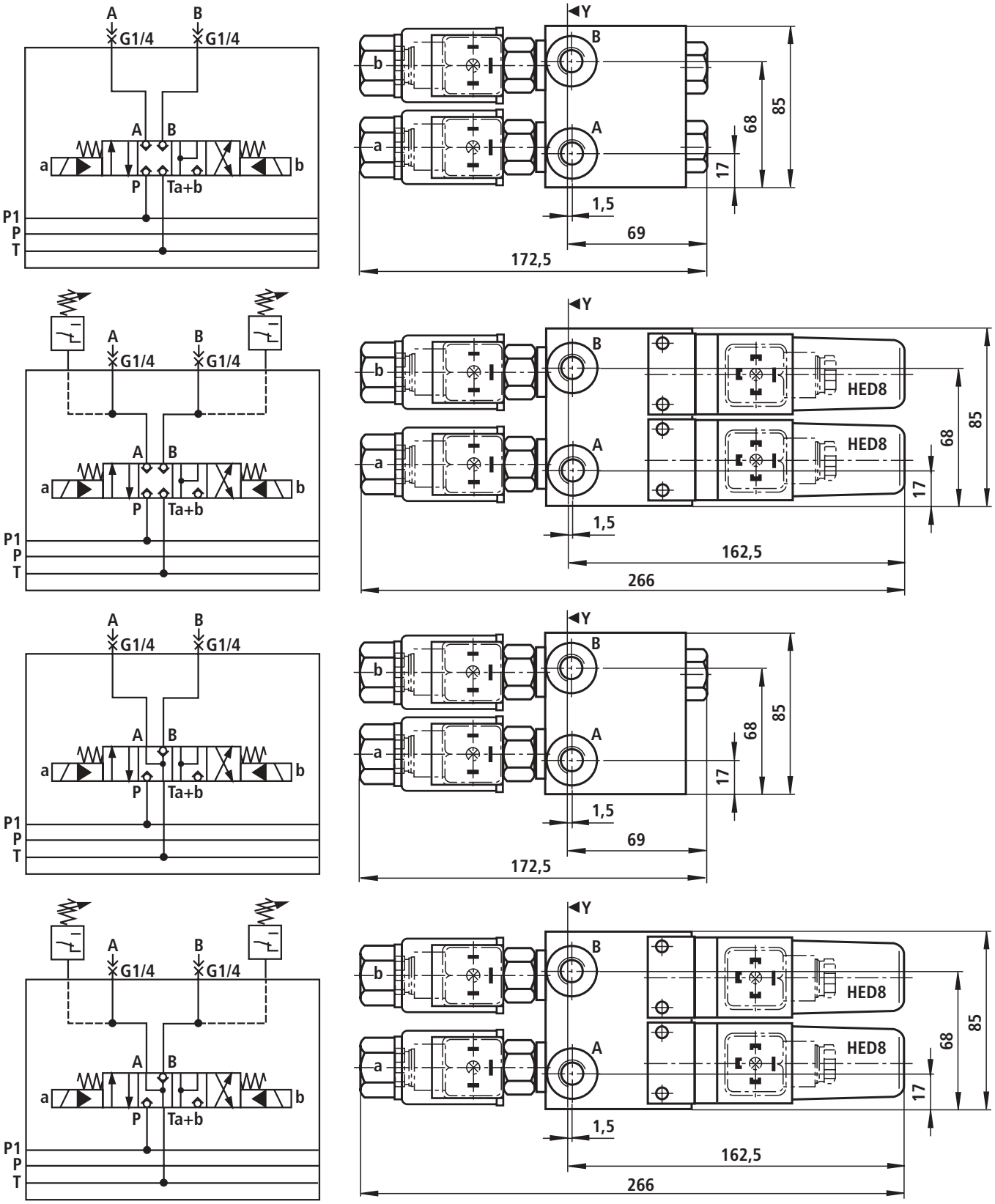

Poppet valve module, type „S“ with additional P1 port (Dimensions in mm)

Control block with pressure switch and P1 port, type„SDP1“

Symbol **Unit dimensions** **Dim. Z = 45 mm**

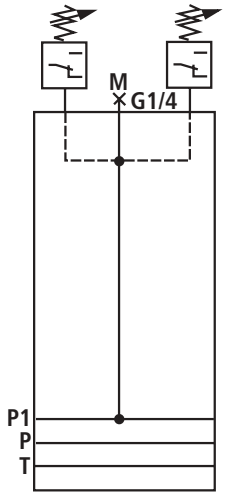

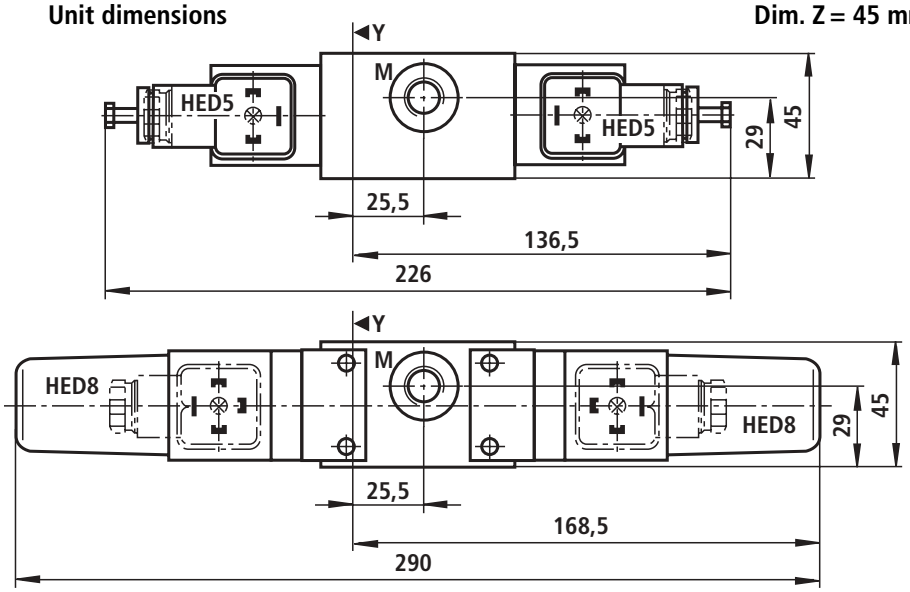

Sandwich block with blocked P1 port, type „SZP1“

Symbol **Unit dimensions** **Dim. Z = 45 mm**

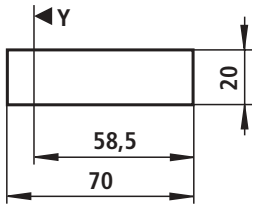

End block with P1 port, type „WSEP1“

Symbol **Unit dimensions** **Dim. Z = 45 mm** **Symbol** **Unit dimensions** **Dim. Z = 45 mm**

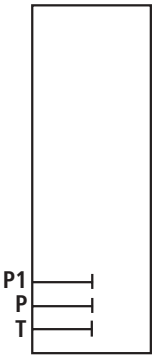

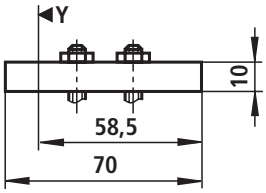

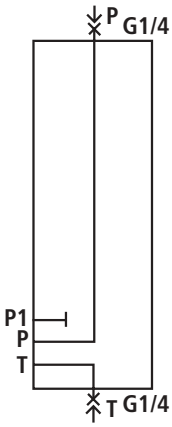

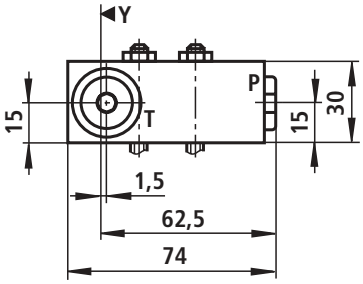

Poppet valve module, type „S“ with additional P1 port (Dimensions in mm)

End block with pressure switch and P1 port, type „WSEDP1“

Symbol

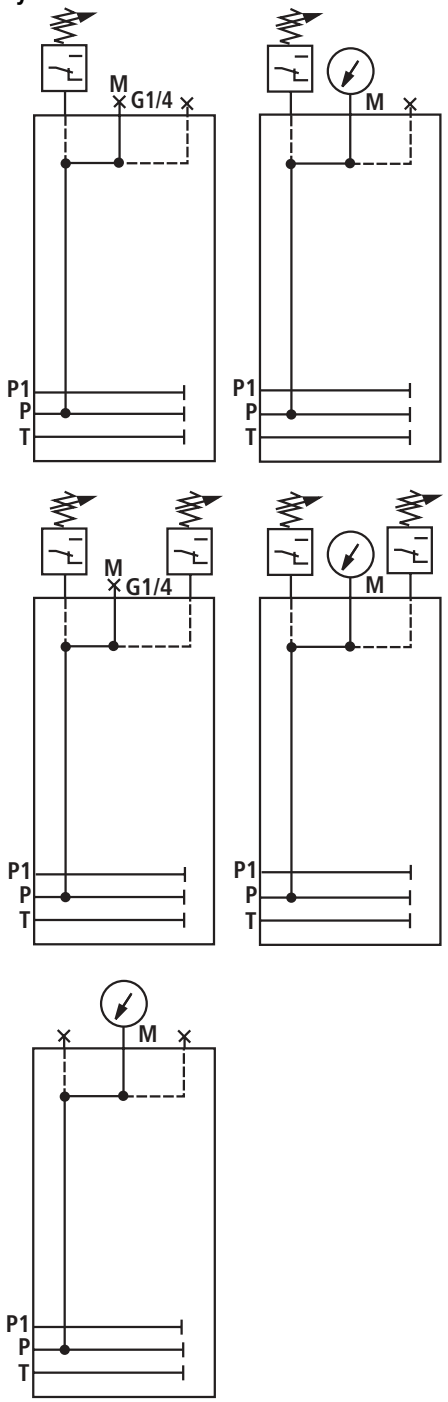

Unit dimensions

Dim. Z = 45 mm

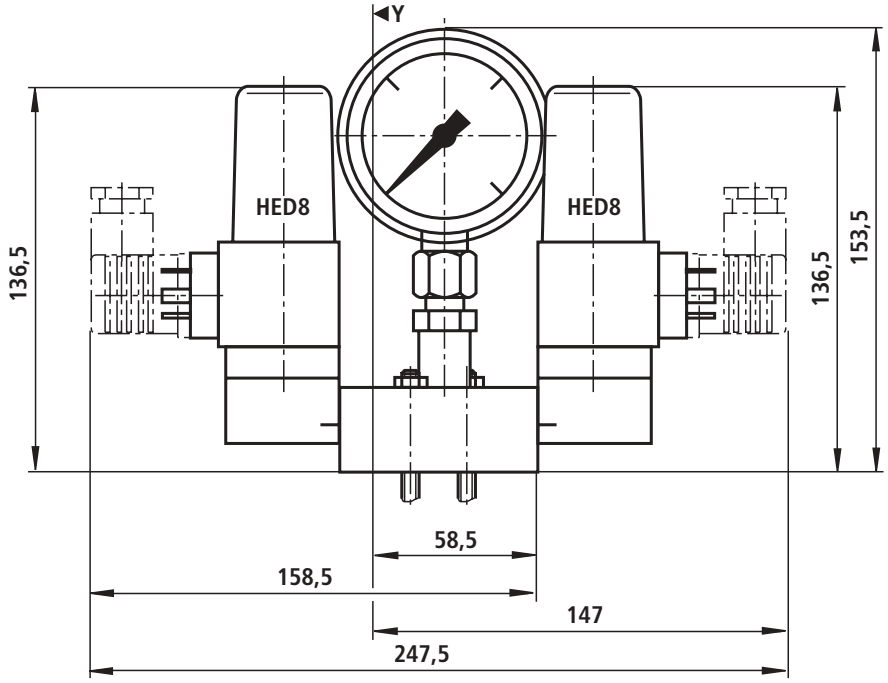

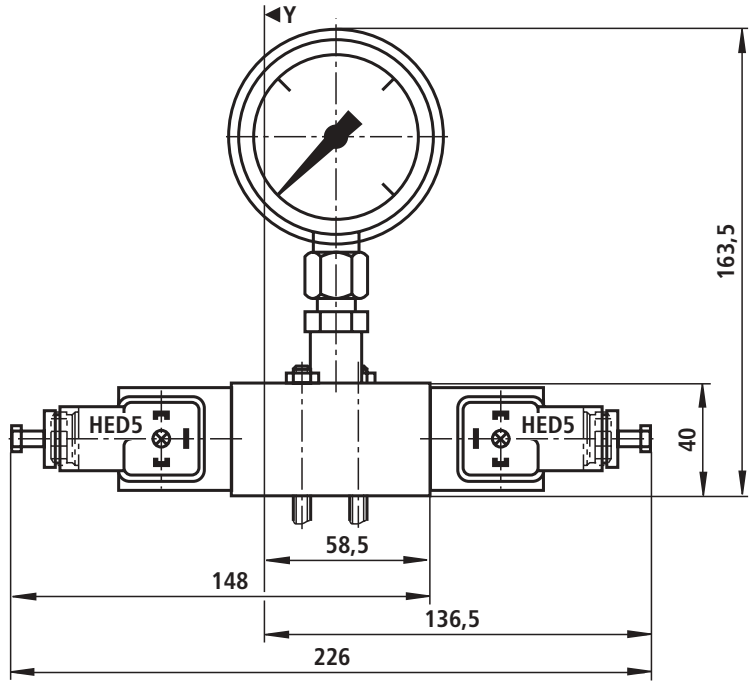

Poppet valve module, type „S“ with additional P1 port (Dimensions in mm)

End block with pressure switch, isolator valve and P1 port, type „WSEDAP1“

Symbol

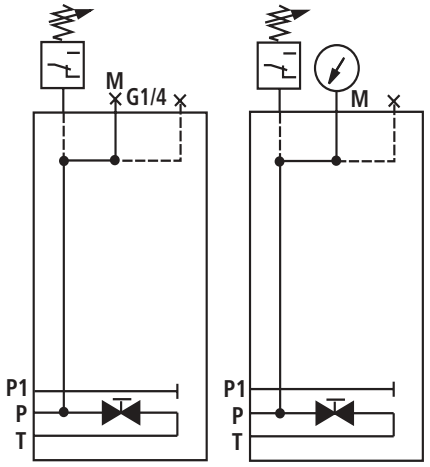

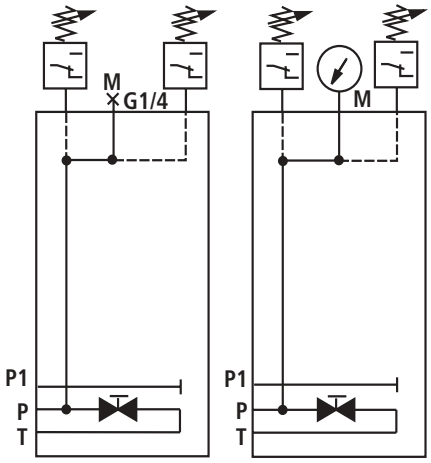

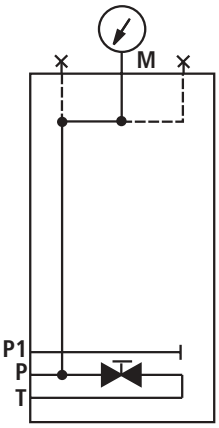

Unit dimensions **Dim. Z = 55 mm**

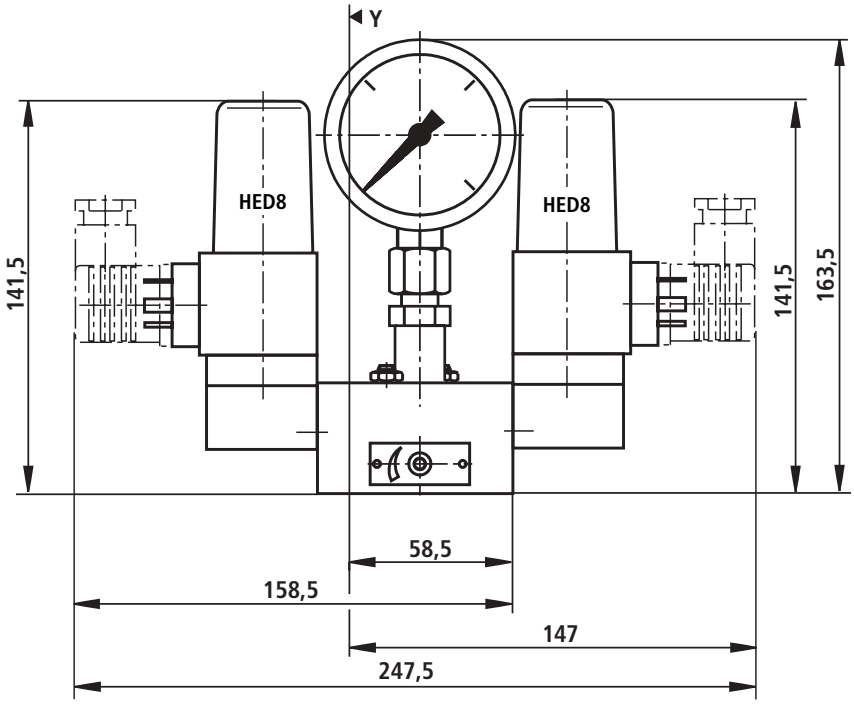

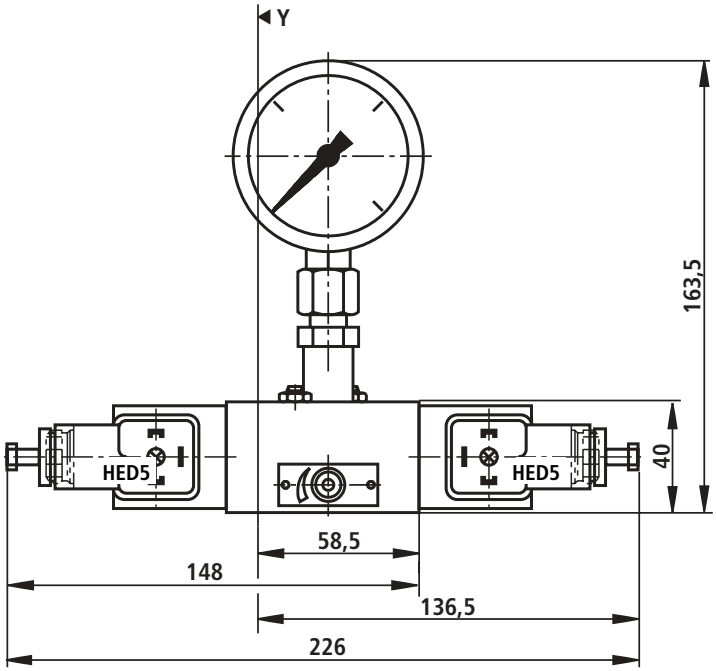

Poppet valve module, type „S“ with additional P1 port (Dimensions in mm)

End block with accumulator and P1 port, type „SESAP1“

Symbol

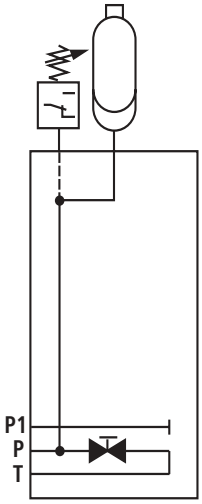

Unit dimensions

Dim. Z_{max} = 98,5 mm

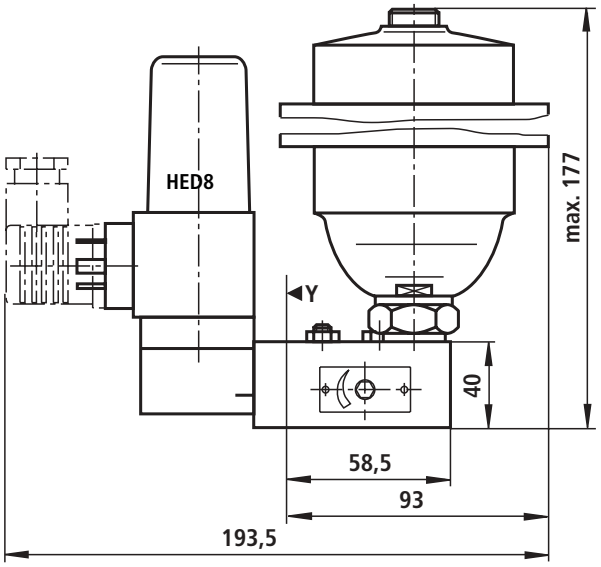

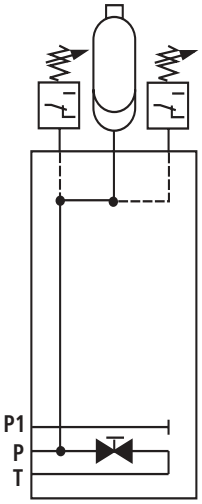

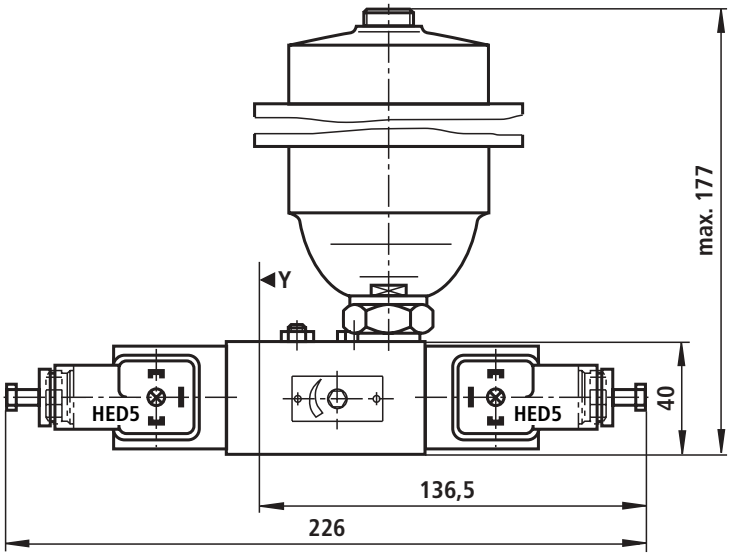

Accumulator safety block with P1 port, type „SSBP1“

Symbol

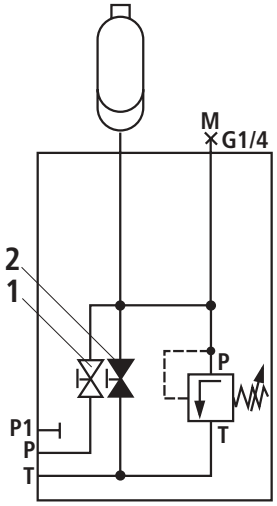

Unit dimensions

Dim. Z_{max} = 88,5 mm

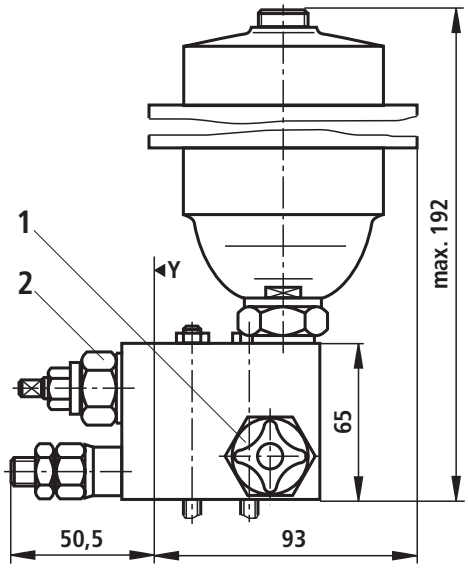

Ordering details

Please enter the quantity required at the relevant Pos.!

Pos.	Qty.	Material No.	Component description	Type code	RE sheet
2.000	1		Connection block	UPE 2–1X/A– [26: V]	s. page 50
or					
2.000	1		Connection block with pressure relief valve	UPE 2–1X/ADB– [1] [2] / [14] / [26: V]	s. page 50
2.100			Control blocks (max. of ten control blocks possible)		s. page 19 and 29 to 36
2.900			Sandwich block	UPE 2–1X/Z– [26: V]	s. page 50
3.000	1		End block	UPE 2–1X/E– [26: V]	s. page 50
or					
3.000	1		End block with pressure switch	UPE 2–1X/WSED– [9] [11] – [12] / [14] / [26: V]	s. page 37
3.001	1 or 2	00074684	Plug-in connector	Colour, black	
or					
3.000	1		End block with pressure switch and isolator valve	UPE 2–1X/WSEDA– [9] [11] / [12] / [14] / [15] / [26: V]	s. page 38
3.001	1 or 2	00074684	Plug-in connector	Colour, black	
or					
3.000	1		End block with accumulator and isolator valve	UPE 2–1X/SESA– [9] [11] / [12] / [18] [26: V]	s. page 39
3.001	1 or 2	00074684	Plug-in connector	Colour, black	
or					
3.000	1		Accumulator safety block	UPE 2–1X/SSB– [1] [3] / [14] / [18] [26: V]	s. page 39
4.000	2		S.H.C.S	M6 x [ ] DIN 912-10.9	
or					
4.000	2		Tie rod	M6 x [ ] DIN 975-10.9	
4.001	2	04001046	Hex. nut	M6-10 DIN 934	
4.002	2	04001047	Lock nut	M6, galvanized	

Further details in clear text. [1 - 26]
For guidelines regarding the ordering details [ ] **see pages 51 to 55**

[ ] Supplements to RE sheet

Ordering details

When designing a control with two separate pressure ports, P and P1:
Please enter the quantity required at the relevant Pos.!

Pos.	Qty.	Material No.	Component description	Type code	RE sheet
2.100			Control blocks (max. of ten control blocks possible)		s. pages 40 to 43
2.900			Sandwich block with P1 port	UPE 2–1X/ZP1– [26 V]	s. page 51
3.000	1		End block with P1 port	UPE 2–1X/EP1– [26 V]	s. page 51
or					
3.000	1		End block with pressure switch and P1 port	UPE 2–1X/WSEDP1– [9] [11] / [12] / [14] / [15] / [26 V]	s. page 44
3.001	1 or 2	00074684	Plug-in connector	Colour, black	
or					
3.000	1		End block with pressure switch, isolator valve and P1 port	UPE 2–1X/WSEDAP1– [9] [11] / [12] / [14] / [15] / [26 V]	s. page 45
3.001	1 or 2	00074684	Plug-in connector	Colour, black	
or					
3.000	1		End block with accumulator, isolator valve and P1 port	UPE 2–1X/SESAP1– [9] [11] / [12] / [18] [26 V]	s. page 46
3.001	1 or 2	00074684	Plug-in connector	Colour, black	
or					
3.000	1		Accumulator safety block with P1 port	UPE 2–1X/SSBP1– [1] [3] / [14] / [18] [26 V]	s. page 46
4.000	2		S.H.C.S.	M6 x [ ] DIN 912-10.9	
or					
4.000	2		Tie rod	M6 x [ ] DIN 975-10.9	
4.001	2	04001046	Hex. nut	M6–10 DIN 934	
4.002	2	04001047	Lock nut	M6, galvanized	

Further details in clear text. [1 - 26] Supplements to RE sheet
For guidelines regarding the ordering details [ ] **see pages 51 to 55**

Modules with an application example

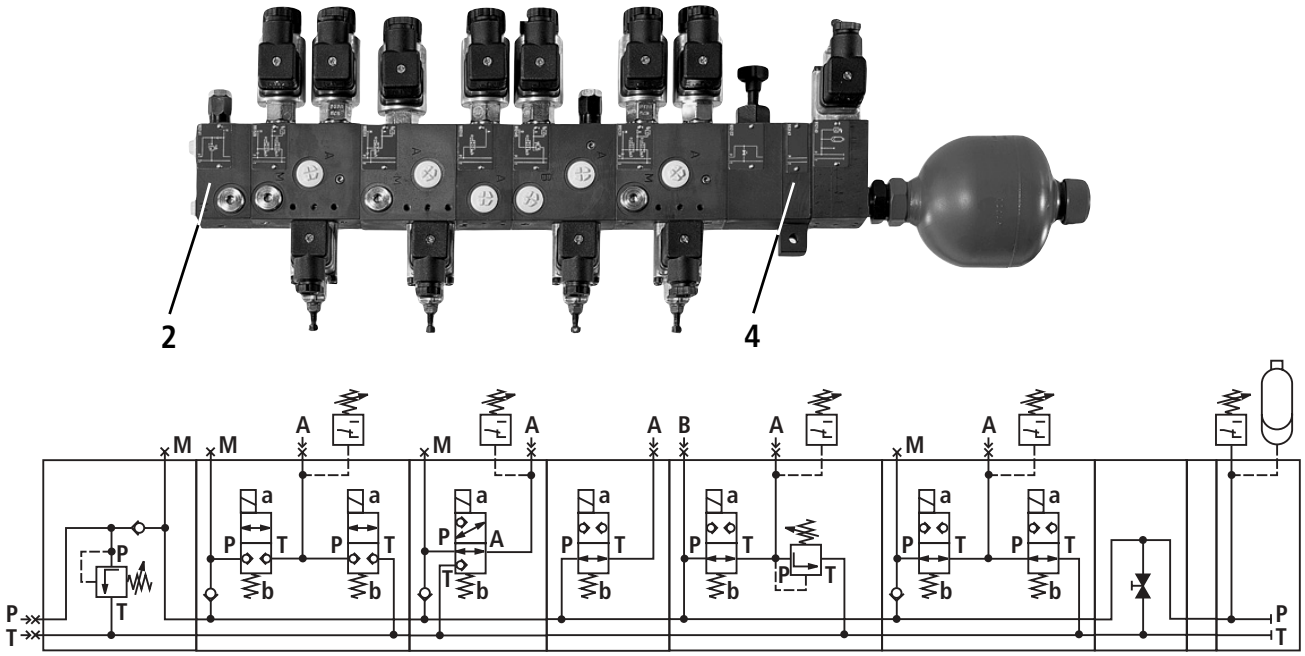

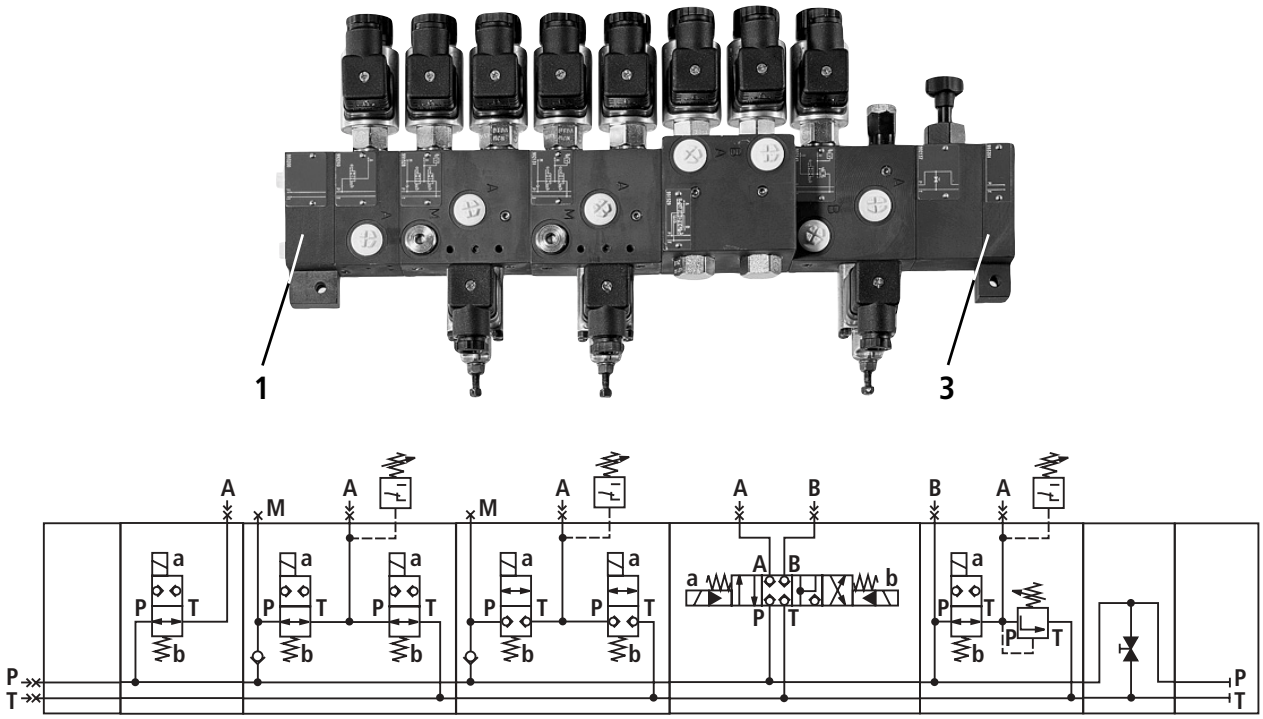

1 Connection block type A (see page 50)

2 Connection block with pressure relief valve type ADB (see page 50)

3 End block type E (see page 50)

4 Sandwich block type Z (page 50)
The sandwich block can be combined with the connection block Pos. 1 or with the end block Pos. 3.

The length dimension is obtained by the addition of dim. „X“ of the directional valve modules (see page 19) and the poppet valve modules (see pages 29 to 36).

Connection block, type „A"

Symbol

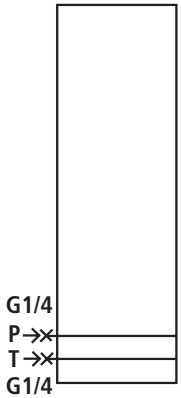

Unit dimensions

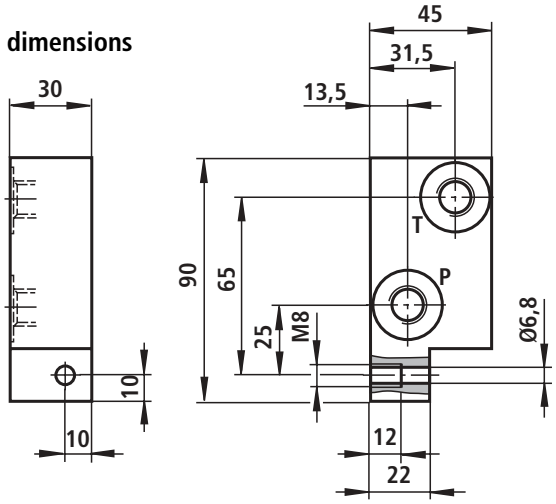

Connection block with pressure relief valve, type „ADB"

Symbol

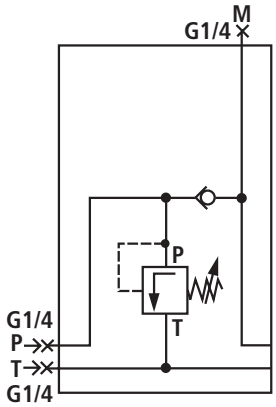

Unit dimensions

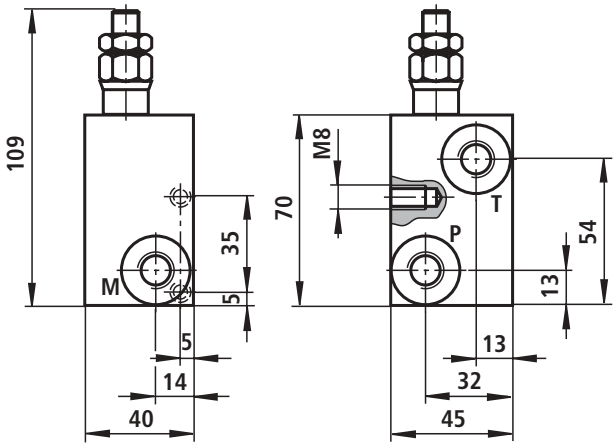

Sandwich block, type „Z"

Symbol

Unit dimensions

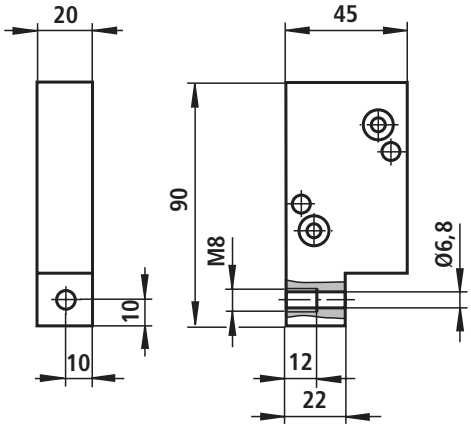

End block, type „E"

Symbol

Unit dimensions

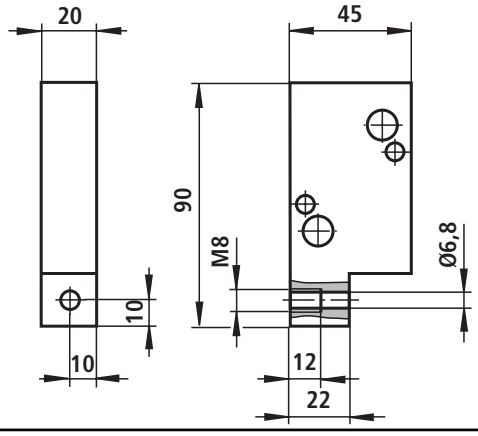

Module for separate mounting with P1 port

Sandwich block with P1 port, type „ZP1“

Symbol

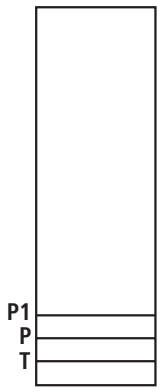

Unit dimensions

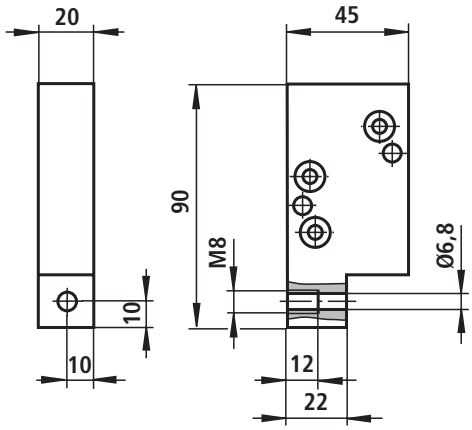

End block with P1 port, type „EP1“

Symbol

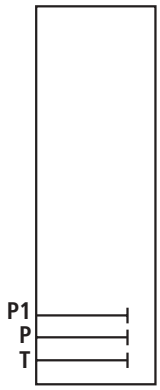

Unit dimensions

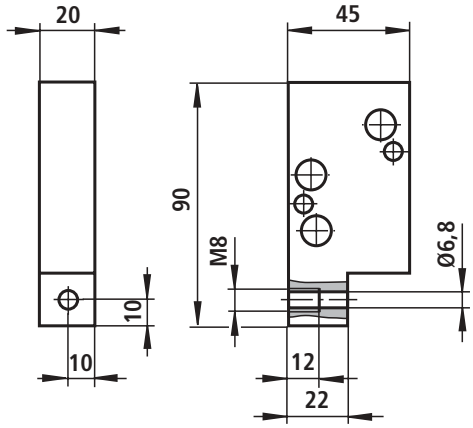

Type key details

1 ☐ Pressure relief valve adjustment element

Grub screw with internal hexagon **= S**

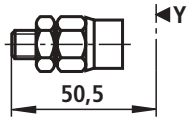

Rotary knob **= H**

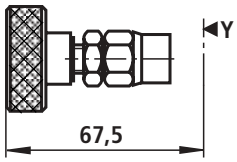

2 ☐ Pressure relief valve pressure ratings

Pressure settable up to max. 50 bar	**= 50**
Pressure settable up to max. 100 bar	**= 100**
Pressure settable up to max. 200 bar	**= 200**
Pressure settable up to max. 350 bar	**= 350**
Pressure settable up to max. 500 bar	**= 500**

3	Pressure stage	Pressure settable up to max. 210 bar	**= 210B**
	of the design tested	Pressure settable up to max. 250 bar	**= 250B**
	pressure relief valve to directive 97/23/EG	Pressure settable up to max. 400 bar	**= 400B**
	(pressure component directive)	Pressure settable up to max. 500 bar	**= 500B**
	(further pressure stages on request)		

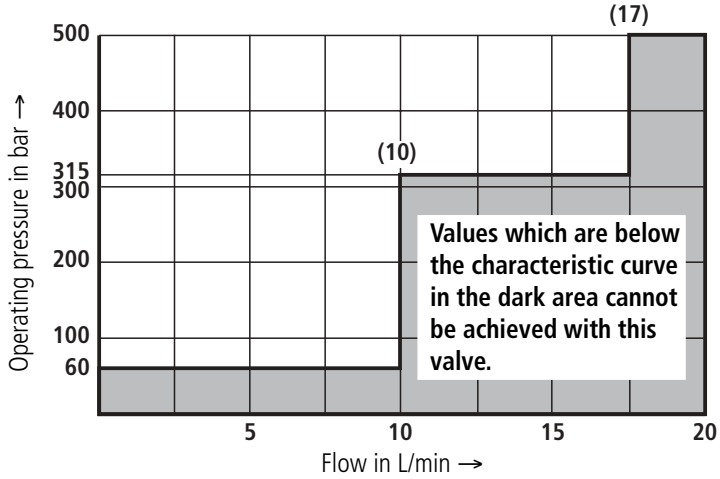

4	2/2 poppet valve designation	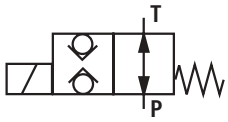	**= P**
		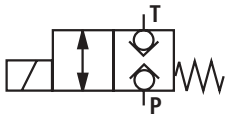	**= N**
5	3/2 poppet valve designation	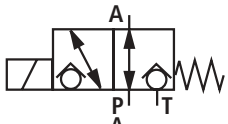	**= U**
		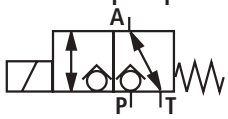	**= C**
6	4/4 poppet valve designation	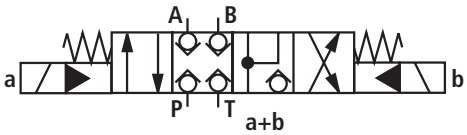	**= K**
		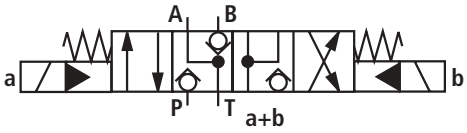	**= L**
7	Poppet valve pressure rating	p_{max} = 350 bar	**= 350 [1)]**
		p_{max} = 500 bar	**= 500 [1)]**
8	Poppet valve solenoid voltage	24 V DC	**= G24**
9	No. of pressure switches	Without pressure switch	**= 0**
		One pressure switch	**= 1**
		Two pressure switches	**= 2**
10	Pressure switch	Without pressure switch	**= No code**
		HED 5 OP1X/…K14	**= HED5**

[1)] Details are only required, when the control block does not have any pressure switches fitted.

Type key details

11	Pressure switch	Without pressure switch	**= No code**
		HED 5 OP1X/…K14	**= HED5**
		HED 8 OP1X/…K14	**= HED8**
12	Pressure switch pressure stage	Without pressure switch	**= No code**
		Max. settable pressure 50 bar	**= 50**
		Max. settable pressure 100 bar	**= 100**
		Max. settable pressure 200 bar	**= 200** [2]
		Max. settable pressure 210 bar	**= 210** [3]
		Max. settable pressure 350 bar	**= 350**
		Max. settable pressure 630 bar	**= 630**
13	Pressure switch in port	Without pressure switch	**= No code**
		A	**= A**
		B	**= B**
		A and B	**= AB**
14	Pressure monitoring	Pressure monitoring with a NS 63 pressure gauge	**= D**
		With test point	**= M**
		Without pressure monitoring	**= O**
15	Max. pressure range of the pressure gauge	Without pressure monitoring	**= No code**
		Display range 60 bar	**= 60** [1]
		Display range 100 bar	**= 100** [1]
		Display range 250 bar	**= 250** [1]
		Display range 400 bar	**= 400** [1]
		Display range 600 bar	**= 600** [1]
16	Adjustment element	Grub screw with internal hexagon and protective cap	**= 2**
17	Secondary pressure	Max. secondary pressure 25 bar	**= 25**
		Max. secondary pressure 75 bar	**= 75**
		Max. secondary pressure 150 bar	**= 150**
		Max. secondary pressure 210 bar	**= 210**
18	Membrane accumulator	Nom. volume in L / Max. pressure in bar	
		0,075 / 250	**= 0.075**
		0,10 / 500	**= 0.10**
		0,16 / 250	**= 0.16**
		0,32 / 210	**= 0.32**
	Bladder accumulator	0,50 / 400	**= 0.50**
19	Filter rating	10 µm	**= 10**

[1] Details are only required, when the control block does not have any pressure switches fitted.

[2] Only valid for HED 8

[3] Only valid for HED 5

20 Clogging indicator

Without clogging indicator **= A**

Optical clogging indicator **= O**

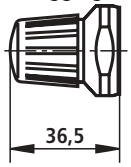

Electrical clogging indicator **= E**

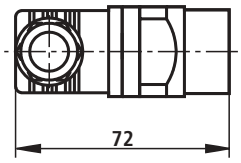

Electrical clogging indicator technical data

Maximum voltage	V	42
Switching capacity	VA	100
Protection with protective cap		IP 65
Contact type		NC

Pin allocation

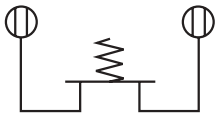

Clean filter element

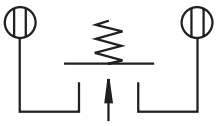

Contaminated filter element

21 Check valve

In port P **= P**

In port T **= T**

In ports P and T **= PT**

22 Connections

Without connection **= No code**

P and T: G 1/4 **= PT**

23 Pressure sequence valve adjustment element

Rotary knob **= 1**

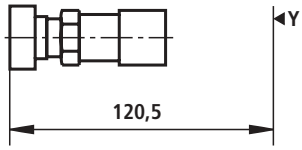

Sleeve with hexagon and protective cap **= 2**

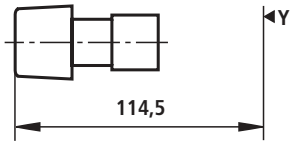

Lockable rotary knob with scale **= 3**

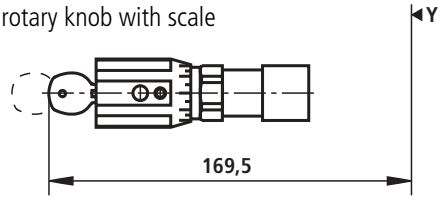

Rotary knob with scale **= 7**

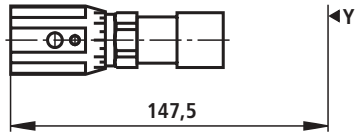

Type key details

24	Pressure sequence valve pressure rating	Pressure settable up to max. 50 bar	**= 50**
		Pressure settable up to max. 100 bar	**= 100**
		Pressure settable up to max. 200 bar	**= 200**
		Pressure settable up to max. 315 bar	**= 315**
25	Switching pressure differential	Switching pressure differential 10 %	**= 10**
		Switching pressure differential 17 %	**= 17**
26	Seals	Seal material FKM	**= V**

Pressure sequence valve

Suitable for use with flows $q_V \geq 2$ L/min

Example spread at a pressure switching differential of: 17% **10%**

Pressure stage **50 bar**

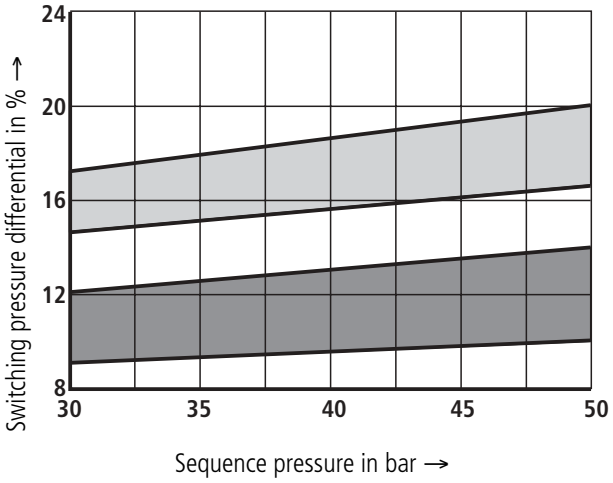

Pressure stage **100 bar**

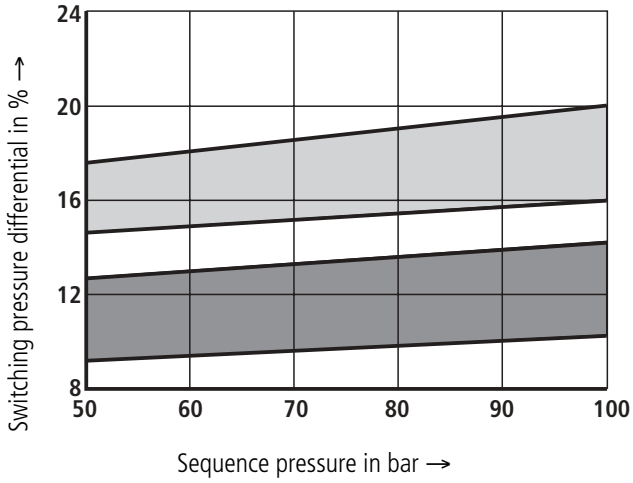

Pressure stage **200 bar**

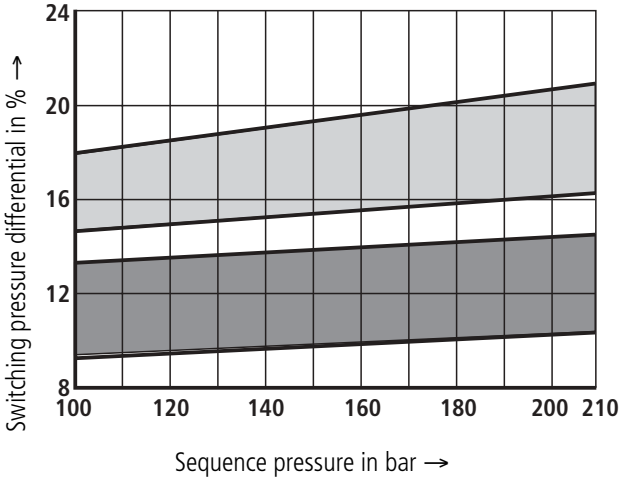

Pressure stage **315 bar**

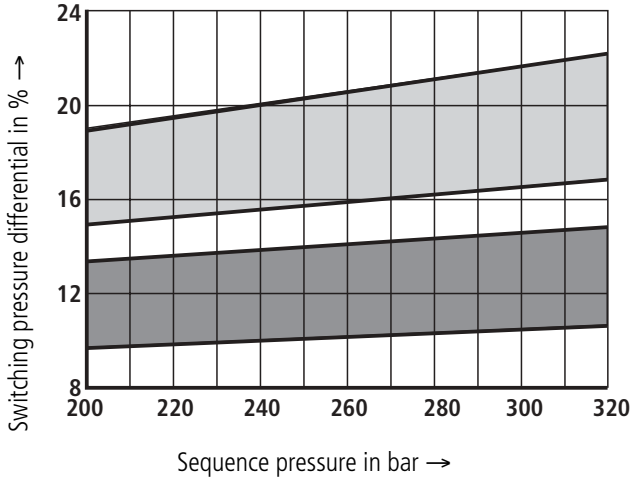

Excentra GmbH & Co. KG

Postfach 13 25 • D-70703 Fellbach, Württemberg
Steinbeisstraße 15 • D-70736 Fellbach, Württemberg
Telefon 07 11 / 57 61-0
Telefax 07 11 / 57 61-365

The data specified above only serve to describe the product. No statements concerning a certain condition or suitability for a cetain application can be derived from our information. It must be remembered that our products are subject to a natural process of wear and ageing.