RE 18 136-05/09.02

Replaces: 07.01

4/2-way spool valves with solenoid operation Type KKDER1

Build size 1

Cavity: T-31A

Maximum operating pressure 350 bar

Maximum flow 50 L/min

H/A/D 6812/01

Type KKDER1DA/HC ...

Overview of contents

Features

- Direct operated directional spool valve with solenoid operation
- Flow can be passed in both directions
- Wet pin DC solenoids
- The solenoid coil can be rotated
- With protected hand override

Ordering details

K K D E	R	1		A / H	C				V

Direct operated directional spool valve, electrically operated

Max. operating pressure 350 bar **= R**

Build size **= 1**

Cavity [1]	Pressure 350 bar q_V = L/min	Symbols	Actuator connections 3
T-31A	50	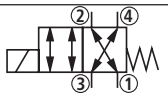	**= D**
		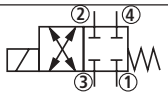	**= E**
		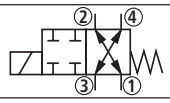	**= F**

V = FKM seals

K4 = ISO 4400 [2]

K40 = Deutsch plug [2]

C4 = 2-pin type Junior-Timer [2]

N0 = Without hand override

N9 = Protected hand override

G24 = 24 V DC

G12 = 12 V DC [3]

Wet pin DC solenoid with removable coil

C =

H= High performance and a T-xxA cavity

A = Series

[1] See page 6

[2] Without plug-in connector!
Plug-in connectors must be ordered separately (see below)

[3] Other voltages on request

Preferred types

Material No.	Type
00728469	KKDER1DA/HCG24N0K4V
00728470	KKDER1EA/HCG24N0K4V
00728471	KKDER1FA/HCG24NoK4V

Plug-in connectors

	Without circuitry Material No.	With circuitry Material No.	
K4 to DIN EN 17530-803 and ISO 4400; for further technical data see RE 08006	**00074684**	**00057292** With indicator light 12...240 V	**00310995** With indicator light and Z-diode protective circuit 24 V
C4	**00221496**		
K40	**00733451**		

Function, section, symbol

Basic principle:

The cartridge solenoid operated valves are direct operated pressure balanced 4/2-way spool valves. They control the start, stop and direction of a flow.

The cartridge valve basically comprises of a housing (5), bush (6) – that can move within the housing (5) – a control spool (9) as well as a return spring (8).

In the de-energised condition the control spool (9) is held in its initial position by the return spring (8). The control spool (9) is actuated via the wet pin solenoid (7).

The various symbols are obtained by using the appropriate spool (D; E and F). Ports 1, 2 and 3 can be continuously applied with an operating pressure of 350 bar and the flow can be passed in both directions (see symbols).

The hand override (10) makes it possible to switch the valve without energising the solenoid. Preferably port 3 is to be used as the pump connection, ports 2 and 4 for the actuators and port 1 as the tank connection.

Symbol "E":

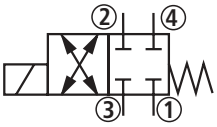

Version **K4**:

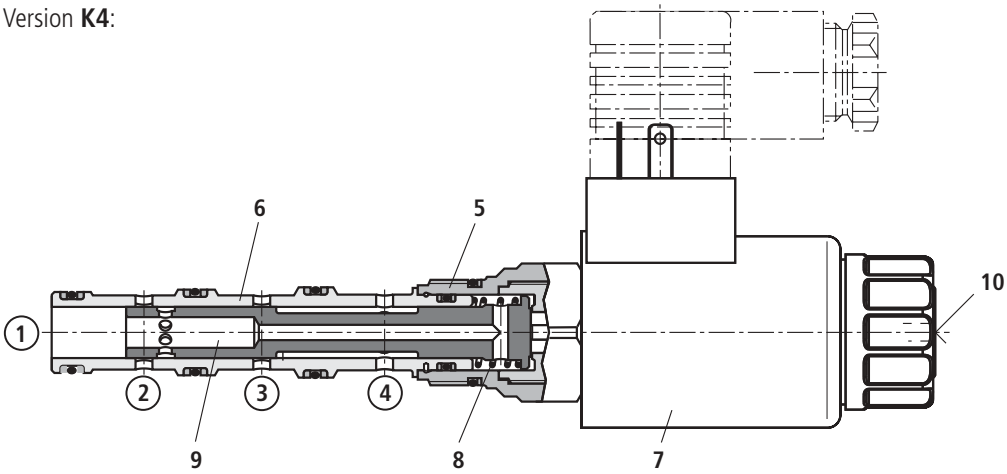

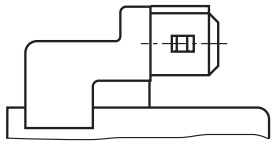

Version **C4**:

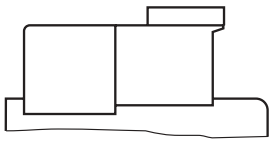

Version **K40**:

Technical data (for applications outside these parameters, please consult us!)

General

Installation		Optional
Ambient temperature range	°C	– 30 to + 50
Weight	kg	0.6

Hydraulic

Maximum operating pressure	bar	350 at all connections
Maximum flow	L/min	50
Pressure fluid FKM seals		Mineral oil (HL, HLP) to DIN 51 524; Fast bio-degradable pressure fluids to VDMA 24 568 (see also RE 90 221); HETG (rape seed oil); HEPG (polyglycols); HEES (synthetic ester); Other pressure fluids on request
Pressure fluid temperature range	°C	– 20 to + 80 (with FKM seals)
Viscosity range	mm^2/s	2.8 to 500
Degree of contamination		Maximum permissible degree of contamination of the pressure fluid is to ISO 4406 (c) class 20/18/15. [1]

Electrical

Voltage type			DC
Available voltages [2]		V V	24 12
Voltage tolerance (nominal voltage)		%	±10
Power consumption		W	19
Duty			Continuous
Switching time to ISO 6403 (solenoid horizontal)	ON	ms	≤ 80
	OFF	ms	≤ 50
Switching frequency		cylces/h	Up to 1500
Protection to DIN 40 050		K4 C4 K40	IP 65 (with mounted and fixed plug-in connector) IP 67 (with mounted and fixed plug-in connector) IP 69K (with mounted and fixed plug-in connector)
Maximum coil temperature [3]		°C	150

[1] The cleanliness class stated for the components must be adhered to in hydraulc systems. Effective filtration prevents faults from occuring and at the same time increases the component service life
For the selection of filters see catalogue sheets RE 50 070, RE 50 076 and RE 50 081.

[2] Further voltages on request.

[3] Due to the occuring surface temperature of the solenoid coils, the European Standards EN563 and EN982 must be taken into account!

When connecting the electrics, the protective conductor (PE ⏚) must be connected according the relevant regulations.

Characteristic curves (measured with HLP46, ϑ_{oil} = 40 °C ± 5 °C and 24 V coil)

Δp-q_V-characteristic curves – Symbol D

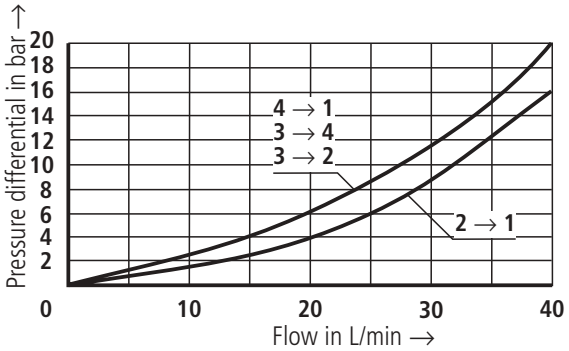

Δp-q_V-characteristic curves – Symbol F

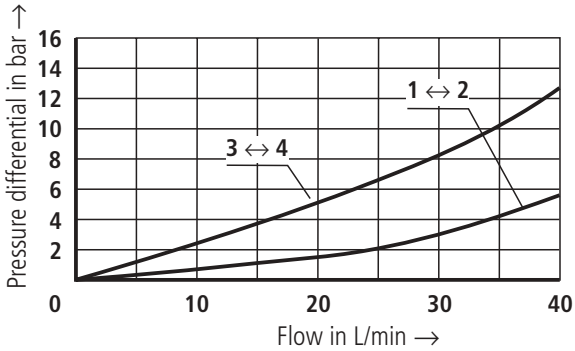

Δp-q_V-characteristic curves – Symbol E

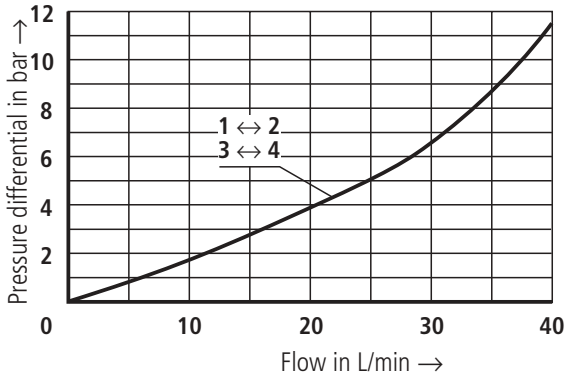

Performance limits (measured with HLP46, ϑ_{oil} = 40 °C ± 5 °C and 24 V coil)

⚠ Attention!

The switching power limits given are for applications featuring two flow directions (e. g. from P to A and simultaneous return flow from B to T).

Due to the flow forces active within the valves, the permitted performance limits for directional valves may be considerably less where there is only one direction of flow (e. g. from P to A and port B blocked)!

(Please consult us for applications of this kind.)

The performance limit was determined using the solenoids at their operating temperature, 10% under voltage and with no pre-loading of the tank.

Flow over two control lands and with pre-opening of the tank 3 → 4 / 2 → 1

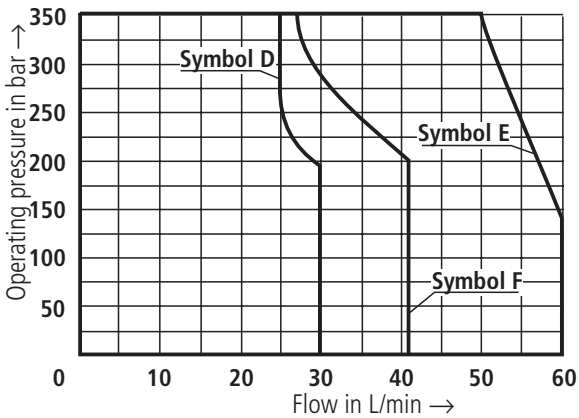

1 = Tank

2 = Actuator B

3 = Pump

4 = Actuator A

Unit dimensions / T-31A cavity; 4 actuator connections; thread M20 x 1.5 **

Dimensions in mm

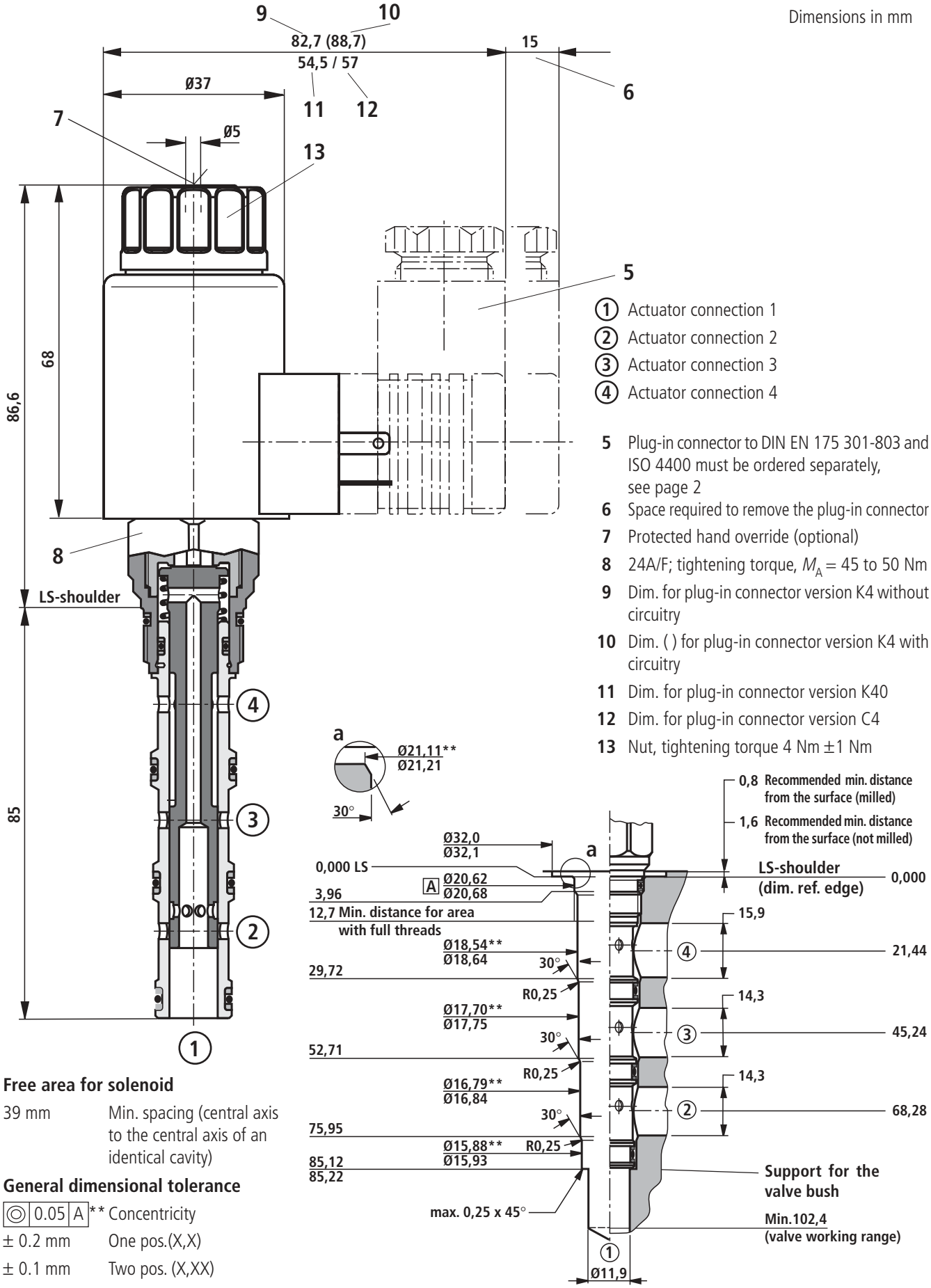

1 Actuator connection 1
2 Actuator connection 2
3 Actuator connection 3
4 Actuator connection 4

5 Plug-in connector to DIN EN 175 301-803 and ISO 4400 must be ordered separately, see page 2
6 Space required to remove the plug-in connector
7 Protected hand override (optional)
8 24A/F; tightening torque, M_A = 45 to 50 Nm
9 Dim. for plug-in connector version K4 without circuitry
10 Dim. ( ) for plug-in connector version K4 with circuitry
11 Dim. for plug-in connector version K40
12 Dim. for plug-in connector version C4
13 Nut, tightening torque 4 Nm ±1 Nm

Free area for solenoid

39 mm	Min. spacing (central axis to the central axis of an identical cavity)

General dimensional tolerance

◎ 0.05 A **	Concentricity
± 0.2 mm	One pos.(X,X)
± 0.1 mm	Two pos. (X,XX)
± 1/2°	Angular tolerance
1.6	Surface finish
0.5	Corner radius

Available individual components

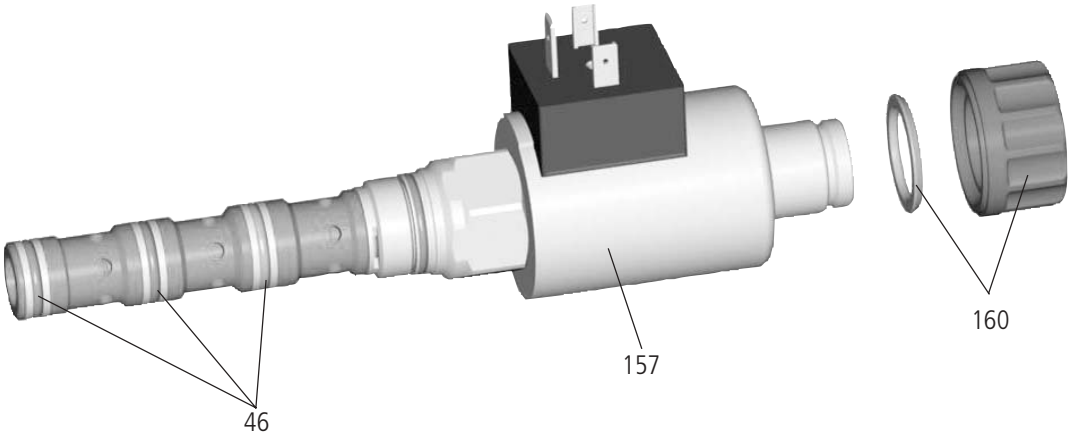

Pos.	Designation		DC voltage	Material No.
157	Coil for individual connection	K4	12 V	00991678
			24 V	00991121
		K40	12 V	00729189
			24 V	00729190
		C4	12 V	00315818
			24 V	00315819
160	Nut			00991453
	O-ring for pole tube			00004280
46	Valve seal kit			00742108

Notes

Bosch Rexroth AG
Industrial Hydraulics

D-97813 Lohr am Main
Zum Eisengießer 1 • D-97816 Lohr am Main
Telefon 0 93 52 / 18-0
Telefax 0 93 52 / 18-23 58 • Telex 6 89 418-0
eMail documentation@boschrexroth.de
Internet www.boschrexroth.de

Bosch Rexroth Limited

Cromwell Road, St Neots,
Cambs, PE19 2ES
Tel: 0 14 80/22 32 56
Fax: 0 14 80/21 90 52
E-mail: info@boschrexroth.co.uk