Return Line Filters

OFR30 Series

Flows to 115 L/min (30 USgpm)
Pressures to 40 bar (600 psi)

Features and Benefits

- OFR-30 conforms to HF3 specifications
- Flows to 115 L/min (30 USgpm)
- Visual indicator is standard
- Electrical indicator also available
- Bypass valve is standard
- Replacement elements available in C-Pak

DESIGN SPECIFICATIONS

Rated flow:		115 L/min (30 US gpm)
Fluid compatibility:		Compatible with most petroleum oil, oil-in-water and water-in-oil fluids.
Temp range:		-40°C to +107°C (- 40°F to +225°F)
Pressure rating:	Operating	40 bar (600 psi)
Bypass setting:		1.7 bar (25 psi)
Material:	Head Bowl	Die cast aluminum Carbon steel
Dry weight: (Approximate)		5,4 kg (12lbs)

OFR 30 * * * ** * 30

1 2 3 4 5 6 7 8

OFR30 Series Filter and Element Model Code

Sample model code:

OFR30SBC03M30

1 Filter Type - OFR

2 Flow Capacity

30 - 115 L/min (30 USgpm)

3 Port Options

B - G1 (formerly 1" BSPF) thread
F - 1" SAE 4-bolt flange Code 61
S - 1.3125-12 UN SAE-16 straight thread 1" O.D. tube

4 Seal Material

B - Buna
V - Viton

5 Element Construction

C - C-Pak (code 03, 05 10, 20)
X - no element

6 Fluid Cleanliness Rating

Code	Target Fluid cleanliness level
03	16/**14/12**
05	18/**16/14**
10	20/**18/15**
20	22/**19/16**
XX	**no element**

7 Delta Indicator Options

M - Mechanical 1.7 bar (25psi)
E - Electrical 1.7 bar (25psi)

8 Design

30 - Standard Design

Items not in bold are non-standard and may have a longer lead time

Return Line Filters

OFR30 Series

Flows to 115 L/min (30 USgpm)
Pressures to 40 bar (600 psi)

V602	1	*	2	C	**
1	2	3	4	5	6

V602 Element Model Codes

(Meets HF3 Specifications)

Sample model code:

V6021B2C03

1 Filter Element -V602

2 Element Collapse Rating

1 - 10 bar (150 psi) Low Collapse

3 Seals

B - Buna-N
V - Viton-A

4 Element Length

mm (inch)
2 - 203 (8) (HF3 length)

5 Element Construction

C - C-Pak (code 03, 05, 10, 20)

6 Fluid Cleanliness Ratings

Code	Target fluid cleanliness level
03	16/**14/12**
05	18/**16/14**
10	20/**18/15**
20	22/**19/16**

Housing Dimensions

Mechanical Indicator

mm (inch)

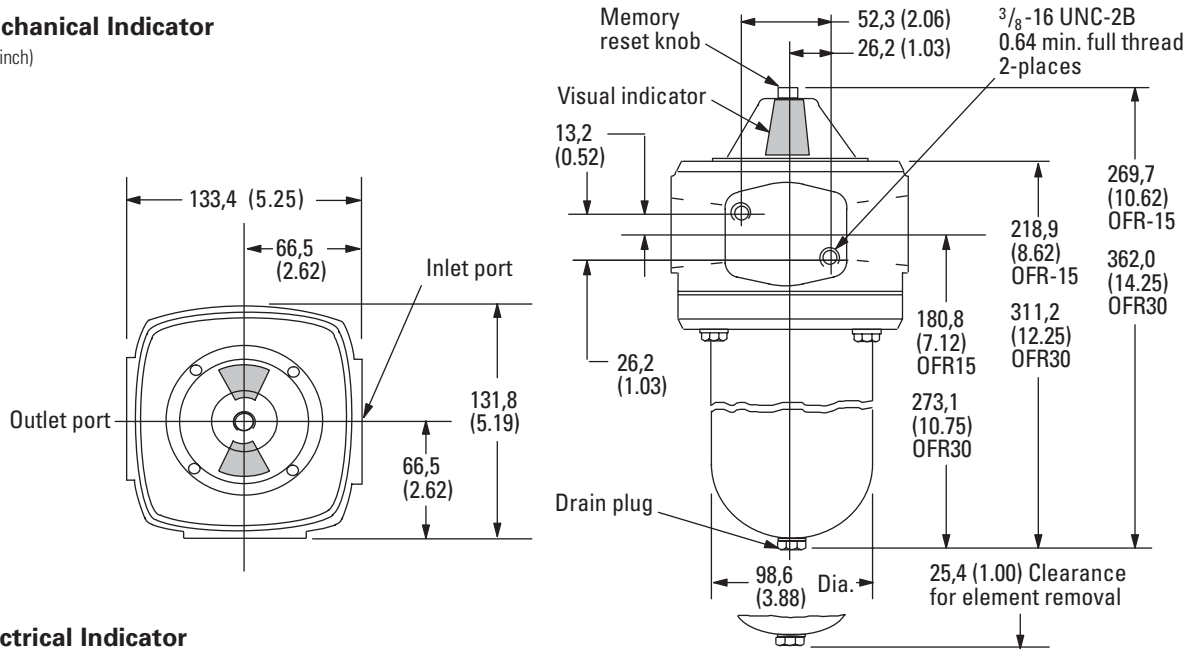

Electrical Indicator

mm (inch)

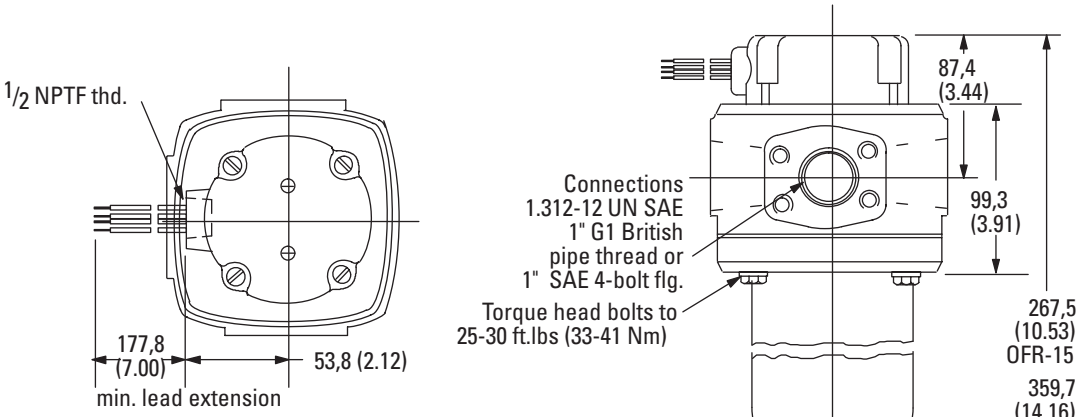

Electrical Indicator Switch Circuit

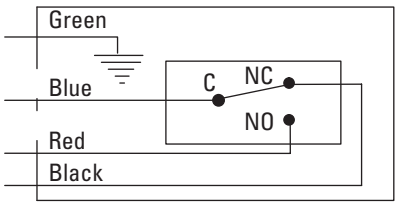

Items not in bold are non-standard and may have a longer lead time

Return Line Filters

OFR 30 Series

Flow Data

Flows to 115 L/min (30 USgpm)
Pressures to 40 bar (600 psi)

Flow versus pressure drop:

150 SUS (32 cSt) oil with specific gravity of ≤ 0.9

Element Flow Data

OFR30 C-Pak

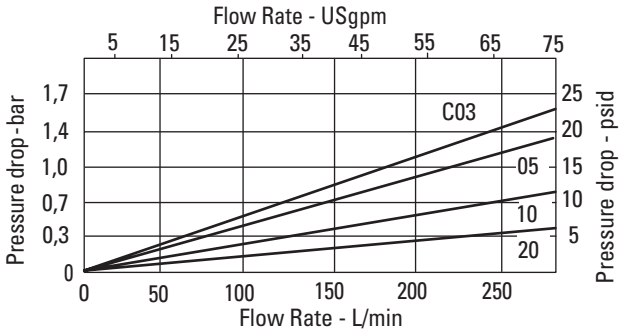

Housing/Bypass Valve Flow Data

Housing

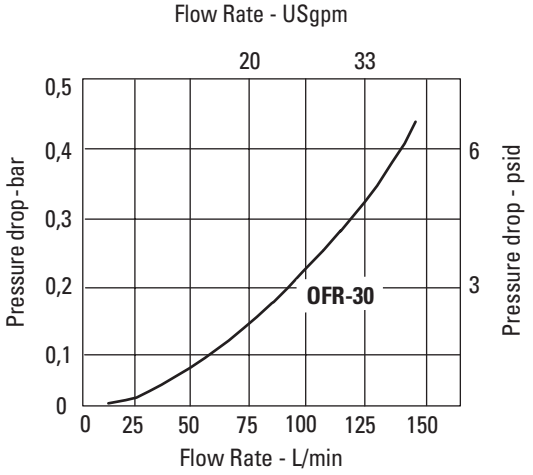

Bypass Valve

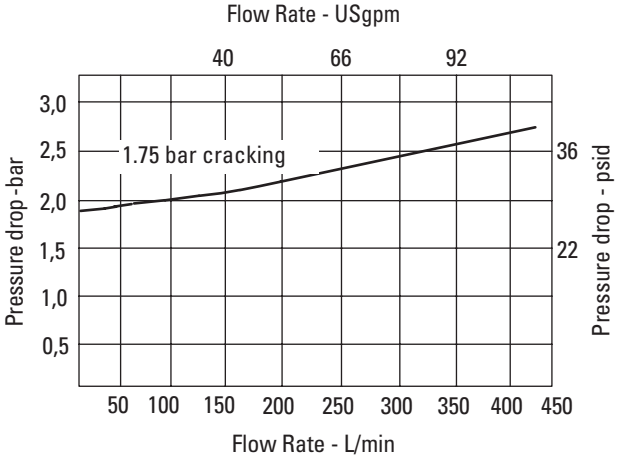

Sample ΔP Calculation : OFR30SBC03M30 - Filter assembly having filter element with micron rating code '03' at 100 L/min flow rate using a hydraulic fluid at 46 cSt viscosity & specific gravity (sp.gr.)0.8.

ΔP Assembly	=	ΔP Housing	+	ΔP Element
	=	Housing ΔP from graph x sp.gr.(actual)/0.9	+	Element ΔP valve from from graph(bar/lpm) x [actual cSt / 32] x [Sp.Gr(actual) / 0.9]
	=	0.22 x 0.8/0.9	+	0.5 x 46/32 x 0.8/0.9
	=	0.193	+	0.632
	=	**0.83 bar**		

Items not in bold are non-standard and may have a longer lead time