Pressure Filters

DMP DIN Series Filters

Flows to 100 L/min (25 USgpm)
Pressures to 100 bar (1,450 psi)

Features and Benefits

- Beta Ratio: $\beta_{X(c)}$ = 1000 to ISO 16889
- Designed to Comply with DIN 24550 specifications
- Fatigue rated to 100 Bar
- Visual and electrical indicators with light options for system design flexibility
- High efficiency six layer media elements
- Bypass and non-bypass options available

DESIGN SPECIFICATIONS

Rated flow:	040	40 L/min (11USgpm)
	063	63 L/min (17USgpm)
	100	100 L/min (26USgpm)
Fluid compatibility:		Compatible with most petroleum oil, oil-in-water and water-in-oil fluids. Optional seals available for phosphate esters
Temp range:		-10°C to + 100°C (+14°F to +212°F)
Pressure rating:	Fatigue	100 bar (1450 psi)
Material:	040/063	Aluminum
	100	Aluminum and Steel
Dry weight:	040	1,8kg (4.0 lbs)
	063	1,8kg (4.0 lbs)
	100	4,2kg (9.3 lbs)

DMP * *** ** * ** * * **
1 2 3 4 5 6 7 8 9

DMP Series Filter

Sample model code:
DMP1100BD6ANBC06

1 Filter Series
DMP - DIN Medium Pressure

2 Element Collapse Rating
1 - 30 bar (435 psi) Low Collapse
4 - 160 bar (2,320 psi) High Collapse

3 Nominal Size
040 - 40 L/min (10.6 USgpm)
063 - 63 L/min (16.6 USgpm)
100 - 100 L/min (26.4 USgpm)

4 Port Size
BB - G ½ (Length 040 only)
BC - G ¾ (Length 063 only)
BD - G 1 (Length 100 only)

5 Valve Options
1 - Non-Bypass
6 - Bypass set at 7 bar (100 psi) cracking pressure

6 Indicator Options
AN - Visual 5 bar (70 psi), No Connector
JN - No Indicator, No Connector
TB - Electrical 5 bar (70 psi), Brad Harrison Connector
TH - Electrical 5 bar (70 psi), Hirschmann

7 Seal Material
B - Buna-N
V - Viton-A

8 Element Construction
C - Standard Construction
H - High Collapse
X - no element

9 Fluid Cleanliness Rating

Code	Target fluid cleanliness level
03	16/**14/12 or better**
06	18/**16/14 or better**
10	20/**18/15 or better**
25	22/**19/16 or better**
XX	no element

Pressure Filters

DMP DIN Series Filters

Flows to 100 L/min (25 USgpm)
Pressures to 100 bar (1,450 psi)

VDP *** * * **
1 2 3 4 5

Element model code

Sample model code:
VDP160BC06

1 Filter Element
VDP - DIN Standard Element

2 Nominal Size
040 - 40 L/min (10.6 USgpm)
063 - 63 L/min (16.6 USgpm)
100 - 100 L/min (26.4 USgpm)

3 Seal Material
B - Buna-N
V - Viton-A

4 Element Construction
C - Standard Construction
H - High Collapse

5 Fluid Cleanliness Rating

Code	Target fluid cleanliness level
03	16/**14/12 or better**
06	18/**16/14 or better**
10	20/**18/15 or better**
25	22/**19/16 or better**

Dimensions DRT Series

Dimensions in mm

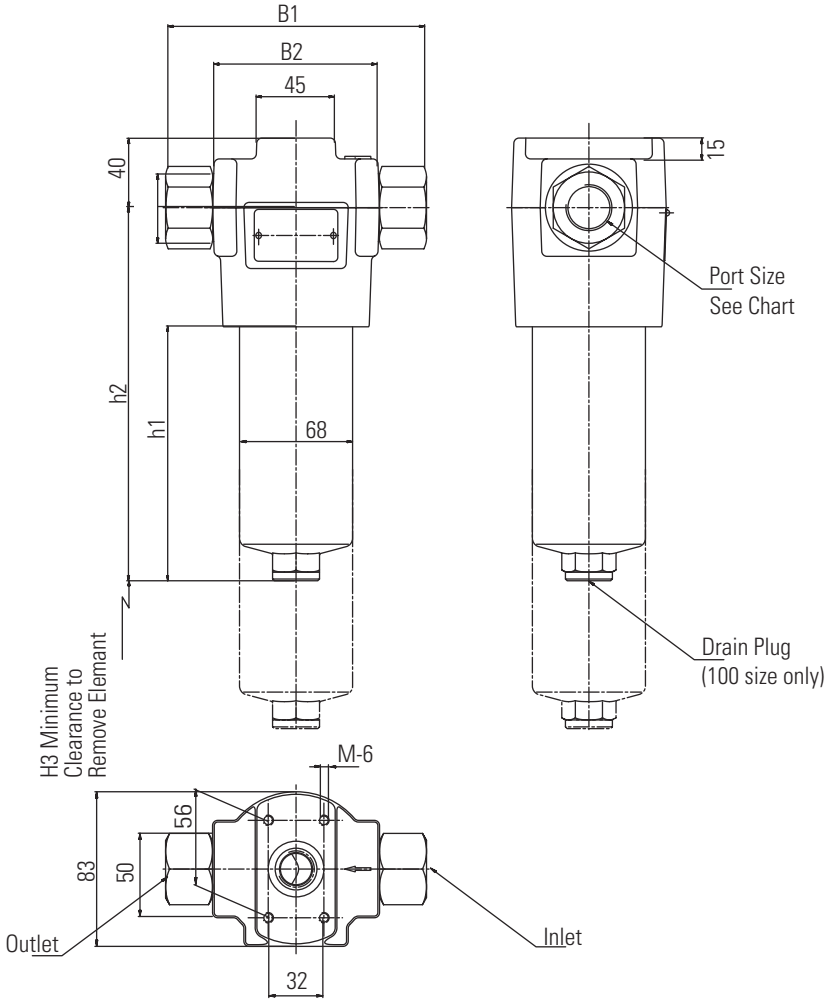

Pressure Filters

Flows to 100 L/min (25 USgpm)
Pressures to 100 bar (1,450 psi)

DMP DIN Series Filters

Housing and Element Flow Data

DMP 040, 063, 100 Series Housing Data

TYPE	PORT SIZE	B1	B2	H1	H2	H3
DMP 040	G 1/2	–	92	91	146	75
DMP 063	G 3/4	–	92	152	207	75
DMP 100	G 1	160	–	246	301	85

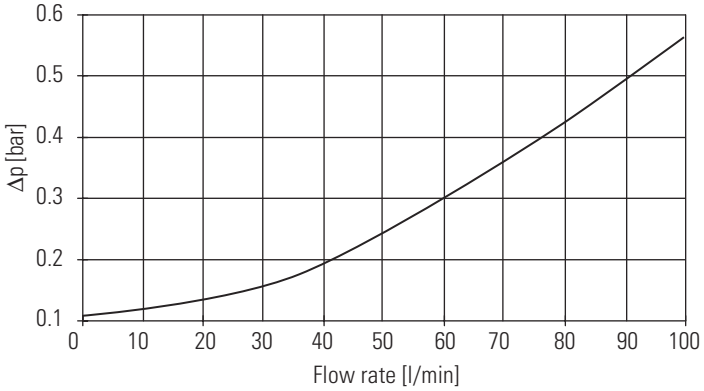
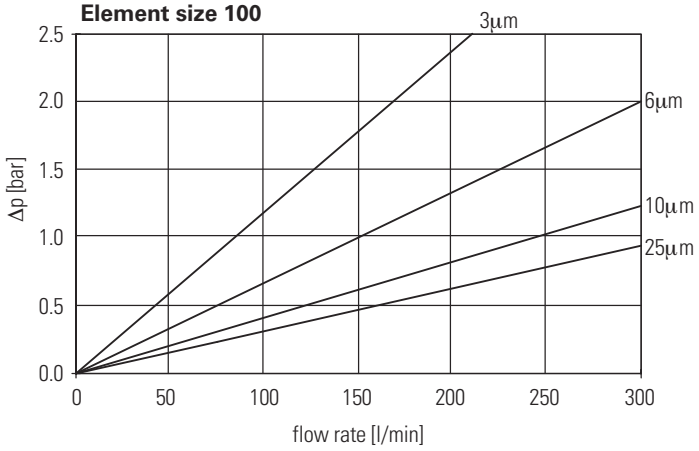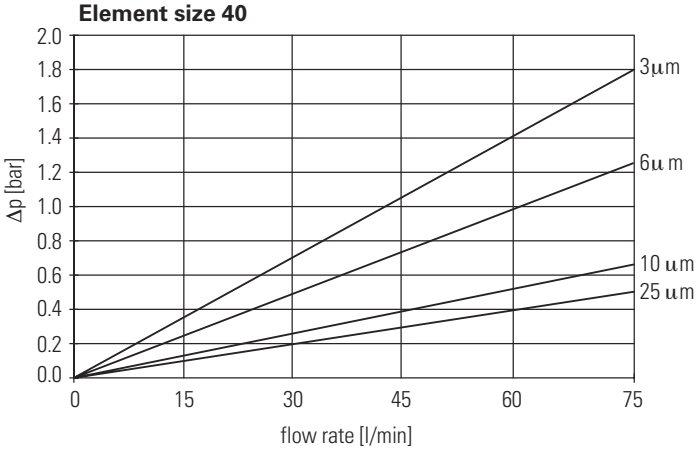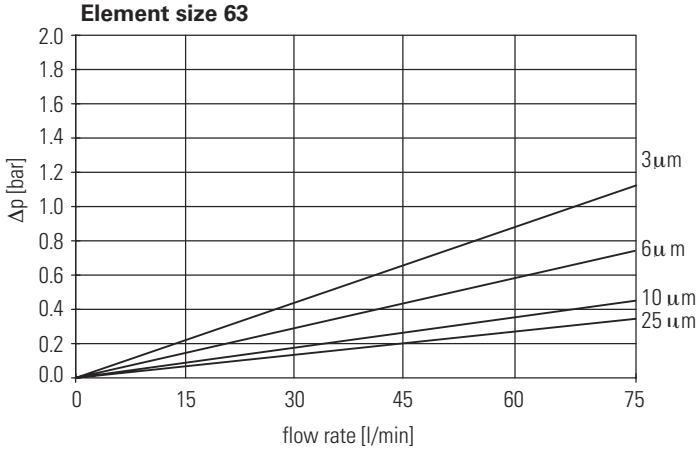
DMP Series Element Flow Data