General Description

Series 665 relief valves are adjustable, in-line direct-acting relief valves. The valve opens when the system pressure exceeds the pressure at which the valve is set.

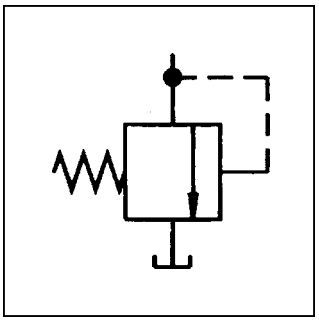

Specifications

Service App.	Hard seat:	Hydraulic
	Soft seat:	Hydraulic and air
Maximum Operating Pressure	Working:	0.3 to 248.4 Bar (4 to 3600 PSI) in 13 ranges
	Reseat:	Range 1: 80% of cracking press. Ranges 2 - 13: 90% of cracking pressure
	Proof:	310.5 Bar (4500 PSI)
Sizes	NPT	1/4", 1/2", 3/4", 1"
Ports	NPT	Pipe threads
	IST	Internal straight threads
Material	Body, Cap	Aluminum alloy, anodized Stainless steel
	Poppet, Adj. Screw	416 Stainless Steel (Hard seat) 303 Stainless Steel (Soft seat)
	Locknut	303 Stainless steel
	Spring	Stainless steel AMS5688 and 17-7PH
	O-ring	Synthetic rubber
	Seat (soft)	Ranges 1 -3: Synthetic rubber Ranges 4 - 13: PTFE
Operating Temperature	-40°C to +121°C (-40°F to +250°F) Higher on special order	

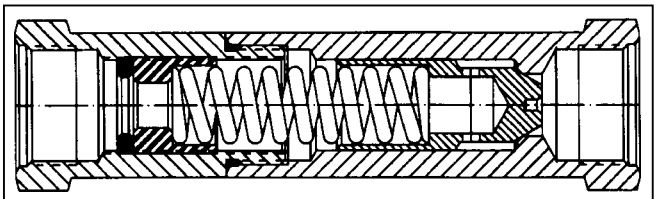

Hard Seat

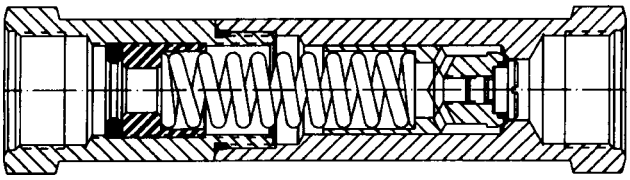

Soft Seat

Features

- Internal adjustment ideal for tamper-proof applications.
- Available for hydraulic or pneumatic service.
- In-line design saves space in power unit application.

Ordering Information

S	665	-1	-1/8	D	2
Options	Catalog Number	Pressure Range	Size	Materials	O-Ring Code
S Soft Seat	**665** Inline Direct-Acting Relief				

Pressure Range

1 4 - 15 PSI	† **8** 630 - 1020 PSI
2 10 - 50 PSI	† **9** 800 - 1500 PSI
3 40 - 125 PSI	† **10** 1400 - 2100 PSI
4 115 - 250 PSI	† **11** 1500 - 2750 PSI
5 235 - 450 PSI	† **12** 2000 - 3100 PSI
6 430 - 650 PSI	† **13** 3000 - 3600 PSI
7 630 - 850 PSI	ML*
	MH**

Size

1/8 NPT
1/4 NPT
3/8 NPT
1/2 NPT
3/4 NPT
1 NPT
4 IST
6 IST
8 IST
12 IST
16 IST

Materials

D Aluminum Alloy
SS Stainless Steel

O-Ring Code

2 Nitrile Others Available

Pressure Range

Range PSI	Pre-Set Cracking Pressure	Soft Seat Material (when used)	Range Dash Number
4-15	10	Synthetic Rubber	-1
10-50	35		-2
40-125	90		-3
115-250	200	PTFE	-4
235-450	360		-5
430-650	550		-6
630-850	750		-7
630-1020	850		-8
800-1500	1000		-9
1400-2100	1750		-10
1500-2750	2200		-11
2000-3100	2600		-12
3000 - 3600	3200		-13

† NOTE: Ranges 8 and above – Hard Seat only
Teflon seats for Ranges 4, 5, 6 and 7 only

Definitions:
Cracking pressure – Liquid: 15 to 20 DPM
Air: steady stream of bubbles
Reseat leakage – Less than 1 DPM or 1 BPM

2502-H1.p65, dd

Parker Hannifin Corporation
Hydraulic Valve Division
Elyria, Ohio, USA

Performance Curves

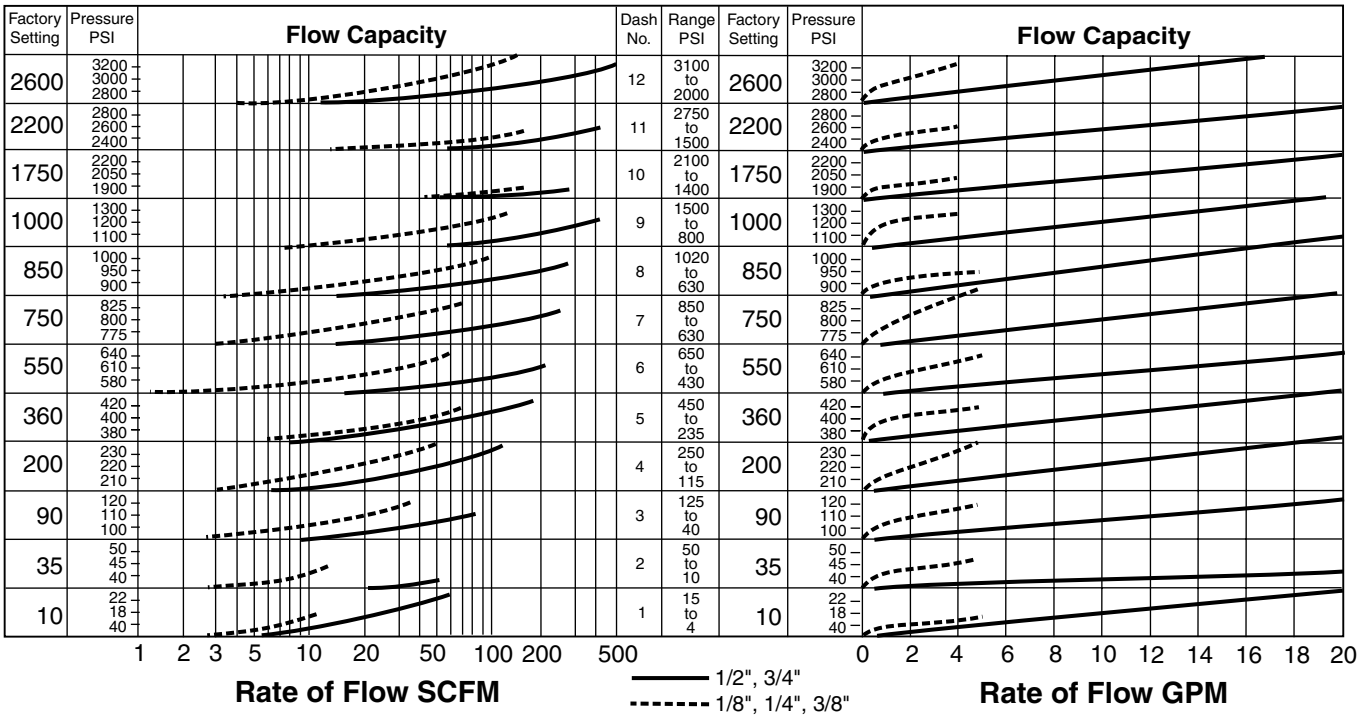

Examples

Pneumatic:

Establish cracking pressure setting of 1/2" valve for flow of 70 SCFM at 27.6 Bar (400 PSI) pressure:

1. Project 70 SCFM on vertical scale.
2. Project 27.6 Bar (400 PSI) scale horizontally intersectiong 1.
3. Project line parallel to curves back to vertical line 1.
4. Read cracking pressure setting: 24.8 Bar (360 PSI).

Hydraulic:

Find amount of pressure increase above 24.8 Bar (360 PSI) cracking pressure when flow through 3/4" valve is increased to 54 LPM (14 GPM):

1. From 360 on vertical pressure scale, follow 3/4" curve until it intersects with the vertical line representing 54 LPM (14 GPM).
2. Project intersecting point horizontally and read pressure, i.e., 29 Bar (420 PSI).
3. Accumulated Pressure:
   420 minus 360 = 4.1 Bar (60 PSI).

H

Dimensions – Shown in inches

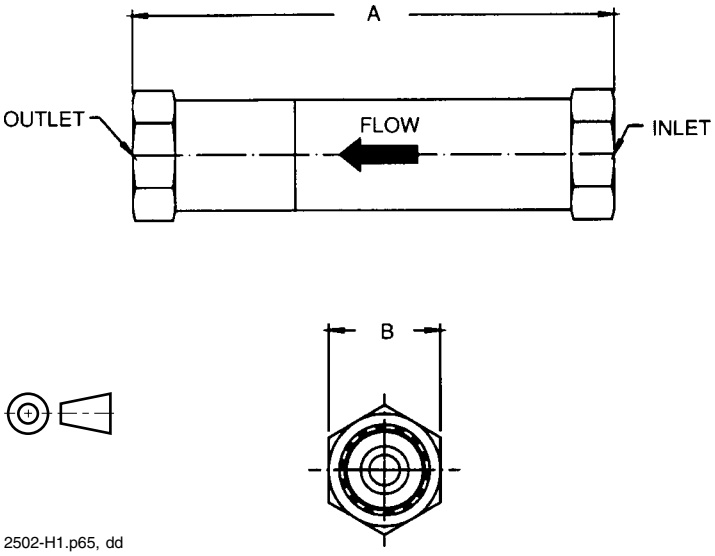

Valve Size NPT	A	B	Maximum Rated Flow G.P.M.	Weights (Approx.) Aluminum Alloy	Weights (Approx.) Stainless Steel
$\frac{1}{4}$	5	$1\frac{3}{16}$	4	0.6 Lbs.	1.3 Lbs.
$\frac{1}{2}$	5	$1\frac{3}{16}$	10		
$\frac{3}{4}$	7	$1\frac{5}{8}$	15	1.7 Lbs.	3.2 Lbs.
1	7	$1\frac{5}{8}$	15		

2502-H1.p65, dd

Parker Hannifin Corporation
Hydraulic Valve Division
Elyria, Ohio, USA