DS(P)E*K*

EXPLOSION-PROOF PROPORTIONAL DIRECTIONAL VALVES ATEX, IECEx, INMETRO

DSE3K*	**ISO 4401-03**
DSPE5K*	**CETOP P05**
DSPE5RK*	**ISO 4401-05**
DSPE7K*	**ISO 4401-07**
DSPE8K*	**ISO 4401-08**
DSPE10K*	**ISO 4401-10**

OPERATING PRINCIPLE

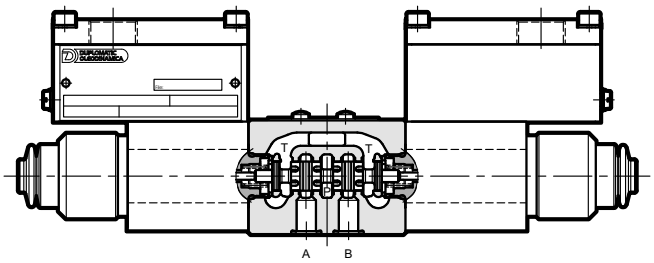

— These explosion proof directional valves are available in size ISO 4401-03 for direct operated type. Pilot operated valves are available in CETOP P05, ISO 4401-05, ISO 4401-07, ISO 4401-08 and ISO 4401-10 sizes.

— They are compliant with ATEX, IECEx and INMETRO requirements and are suitable for use in potentially explosive atmospheres, for surface plants or mines.

— A low temperature version (up to -40 °C) is also available.

— The DSE3K* valves are supplied with a finishing surface treatment (zinc-nickel) suitable to ensure a salt spray resistance up to 600 hours; for DSPE*K* valves, this finishing is available upon request.

— **Details for classification, operating temperatures and electrical characteristics are in the technical data sheet 02 500 'Explosion proof classification'.**

PERFORMANCES (obtained with viscosity of 36 cSt at 50°C and electronic control card)		**DSE3K***	**DSPE5K* DSPE5RK***	**DSPE7K***	**DSPE8K***	**DSPE10K***
Max operating pressure: P - A - B ports T ports	bar	350 210	350 see paragraph 7			
Controlled flow rate with Δp 10 bar P-T	l/min	see par. 2	see paragraph 5			
Step response		see paragraph. 6				
Hysteresis	% of Q_{max}	< 6% (PWM 200Hz)	< 4% (PWM 100 Hz)			
Repeatability	% of Q_{max}	< ±1,5%	< ± 2%			
Electrical characteristics		see paragraph 9				
Temperature ranges (ambient and fluid)	°C	see data sheet 02 500				
Fluid viscosity range	cSt	10 ÷ 400				
Fluid contamination degree		According to ISO 4406:1999 class 18/16/13				
Recommended viscosity	cSt	25				
Mass single solenoid valve double solenoid valve	kg	1,9 2,8	7,5 8,3	9,9 10,7	16,1 16,9	52,8 53,5

1 - IDENTIFICATION OF DIRECT OPERATED VALVE DSE3K*

1.1 - Identification code

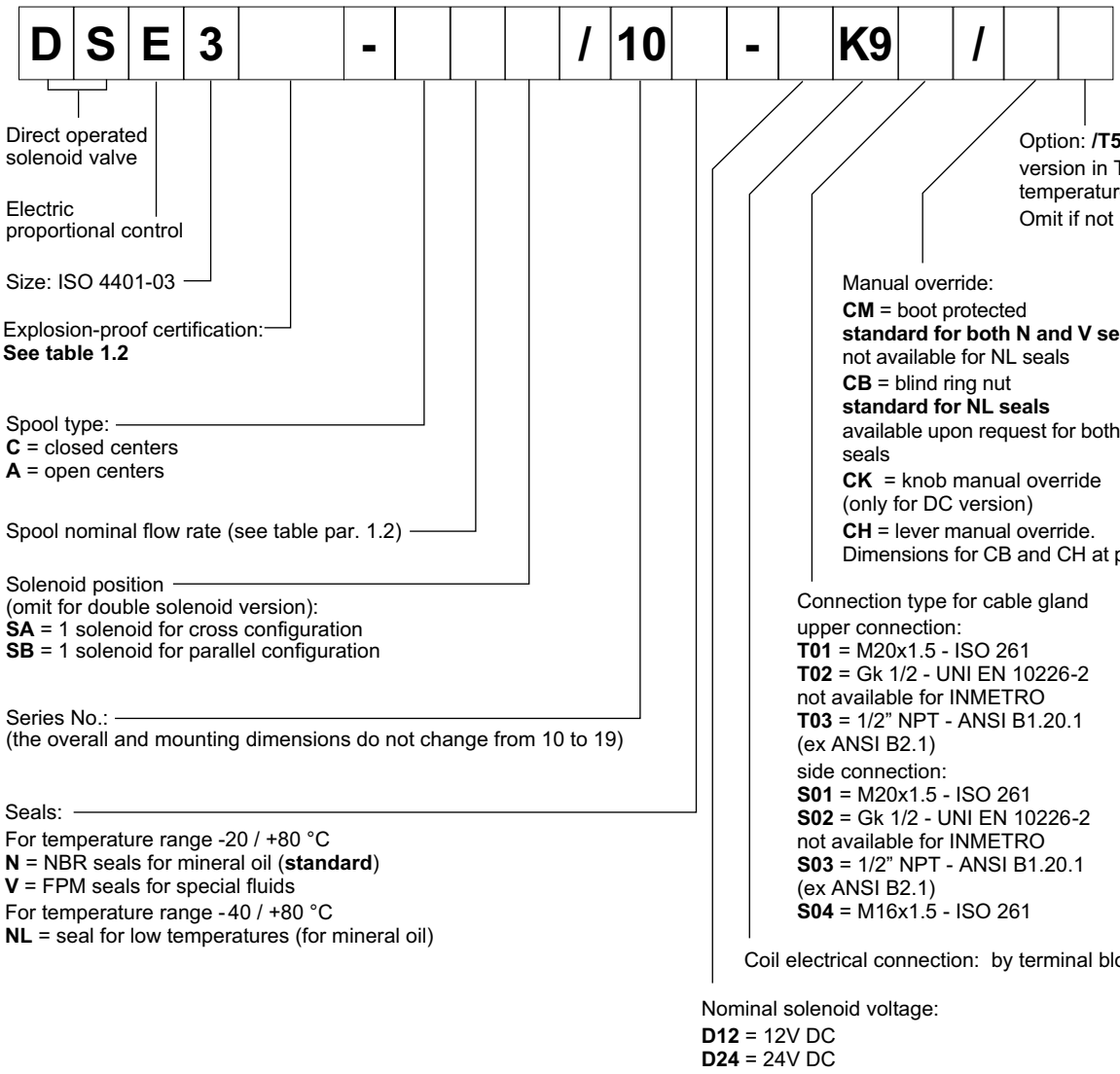

NOTE: The zinc-nickel standard finishing surface treatment is suitable to ensure a salt spray resistance up to 600 hours (test operated according to UNI EN ISO 9227 standards and test evaluation operated according to UNI EN ISO 10289 standards)

1.2 - Names of valves per certification

	ATEX		IECEx		INMETRO	
for gases for dusts	**KD2**	II 2GD	**KXD2**	IECEx Gb IECEx Db	**KBD2**	INMETRO Gb INMETRO Db
for mines	**KDM2**	I M2	**KXDM2**	IECEx Mb	**KBDM2**	INMETRO Mb

NOTE: Refer to the technical data sheet 02 500 for marking, operating temperatures and available versions.

1.3 - Available configurations

Valve configuration depends on the combination of the following elements:
number of proportional solenoids, spool type, nominal flow rate.

2 solenoids configuration:
3 positions with spring centering

"**SA**" configuration: 1 solenoid on side A.
2 positions (central + external) with spring centering

"**SB**" configuration: 1 solenoid on side B.
2 positions (central + external) with spring centering

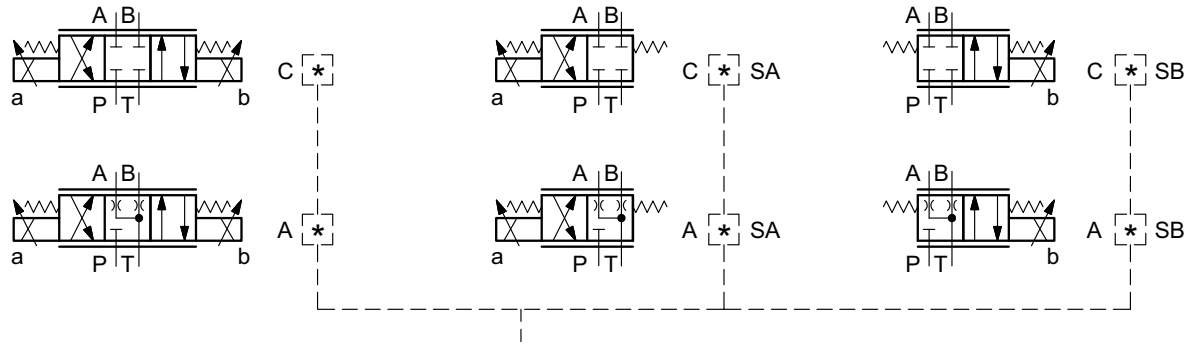

*	Nominal flow with Δp10 bar P→T
04	4 l/min
08	8 l/min
16	16 l/min
16/08	16 (P→A) / 08 (B→T) l/min
26	26 l/min
26/13	26 (P→A) / 13 (B→T) l/min

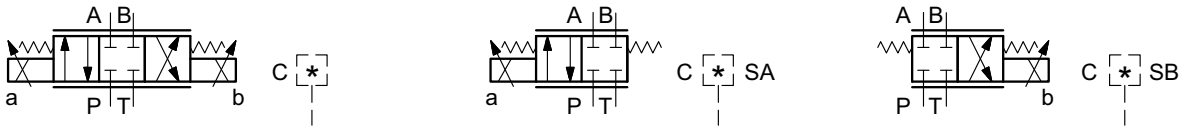

*	Nominal flow with Δp10 bar P→T
01R	1 l/min

2 - DSE3K* CHARACTERISTIC CURVES

(obtained with mineral oil with viscosity of 36 cSt at 50°C and electronic control card)

Typical flow control characteristics, according to current supply to the solenoid.

The reference Δp values are measured between ports P and T on the valve.

SPOOL TYPE C01R

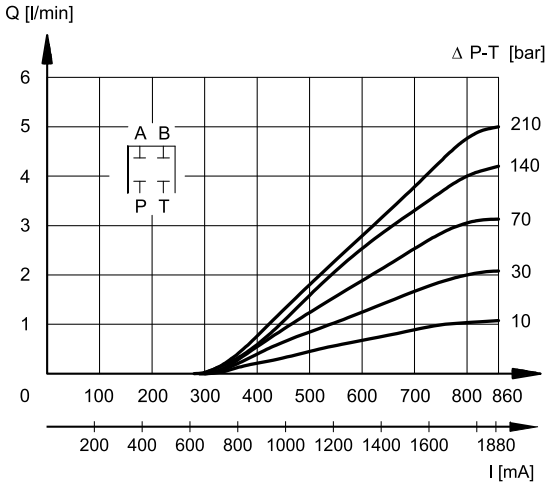

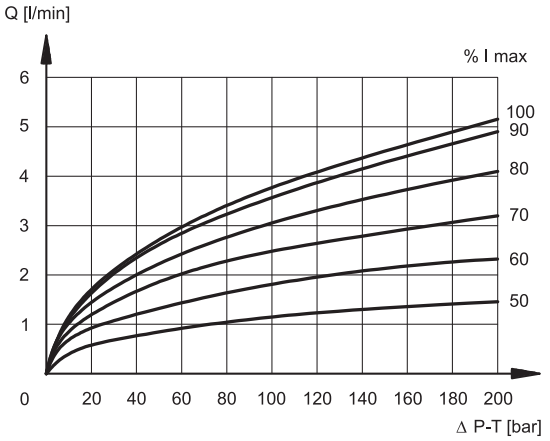

SPOOL TYPE C04

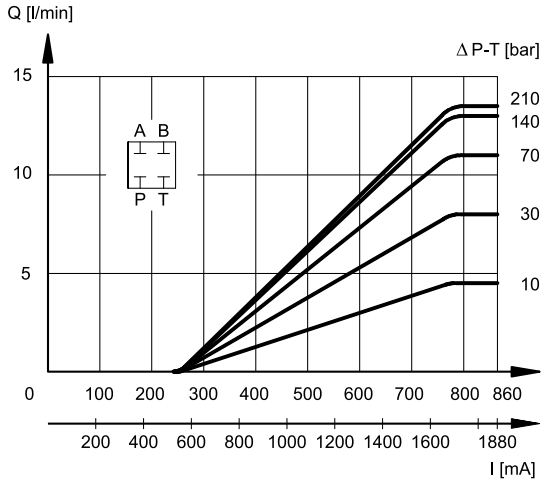

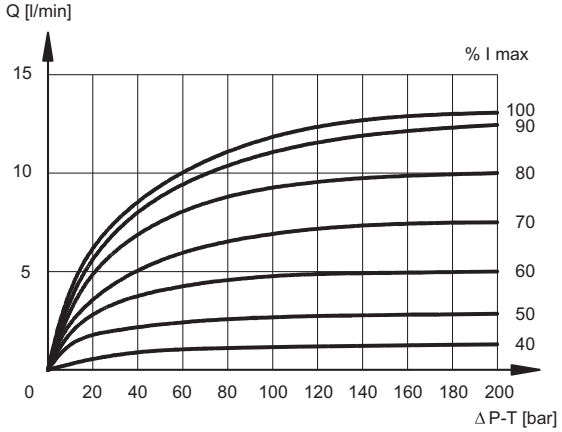

SPOOL TYPE C08

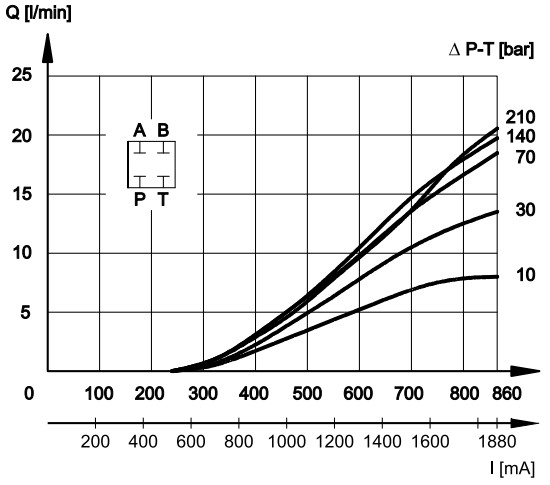

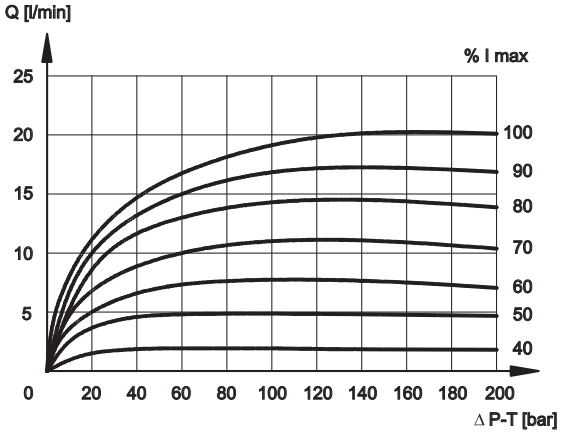

SPOOL TYPE C16

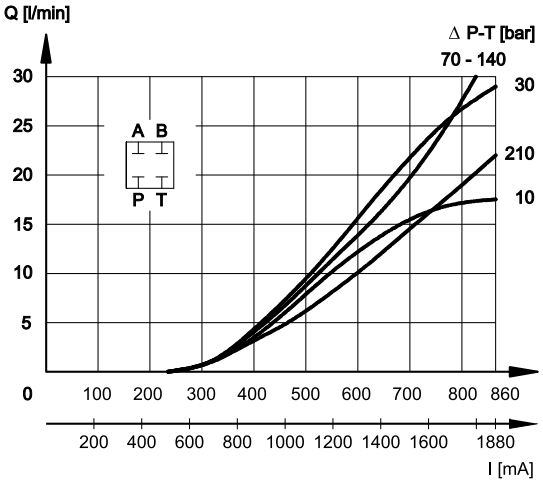

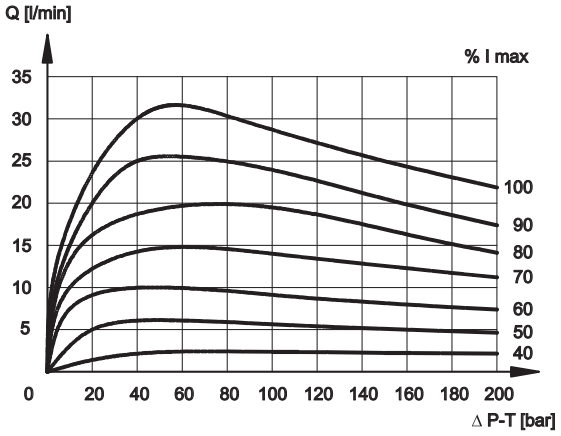

SPOOL TYPE C26

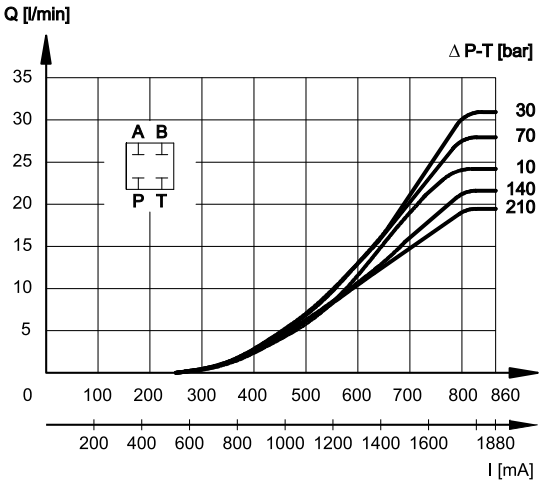

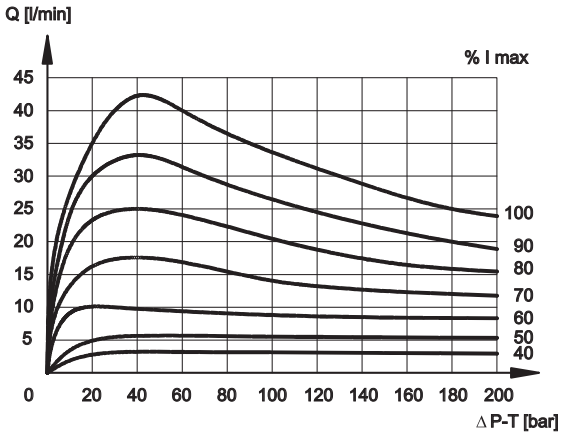

SPOOL TYPE A04

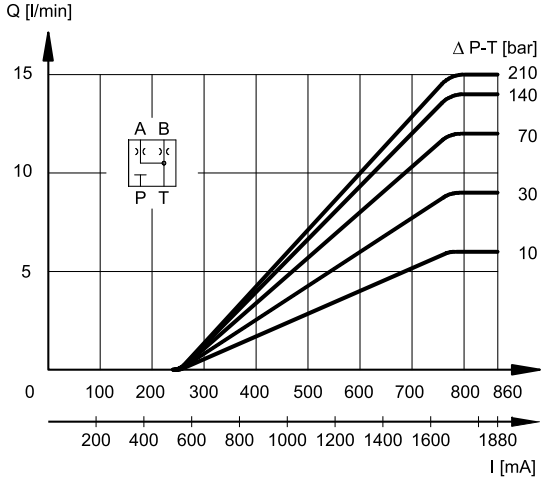

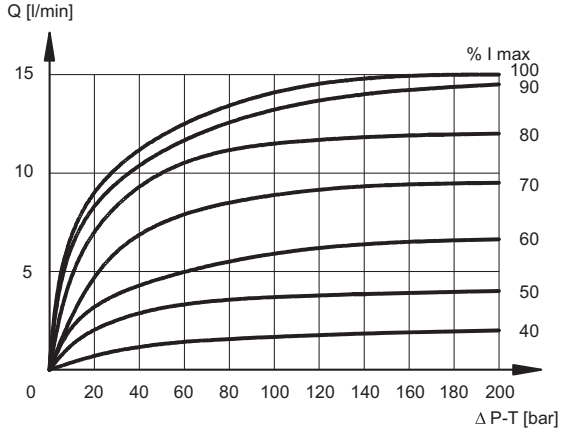

SPOOL TYPE A08

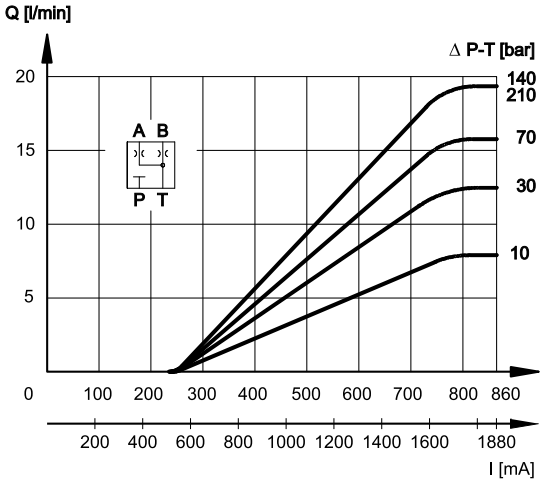

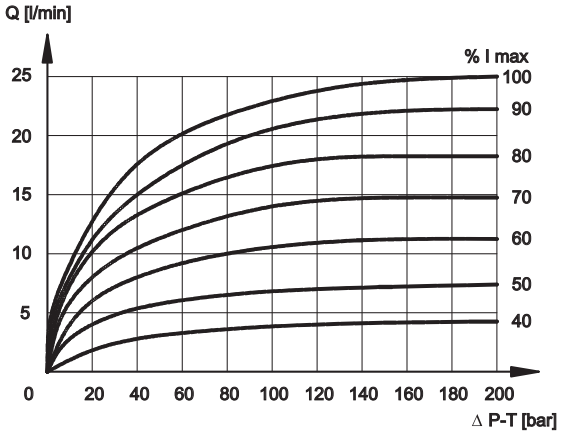

SPOOL TYPE A16

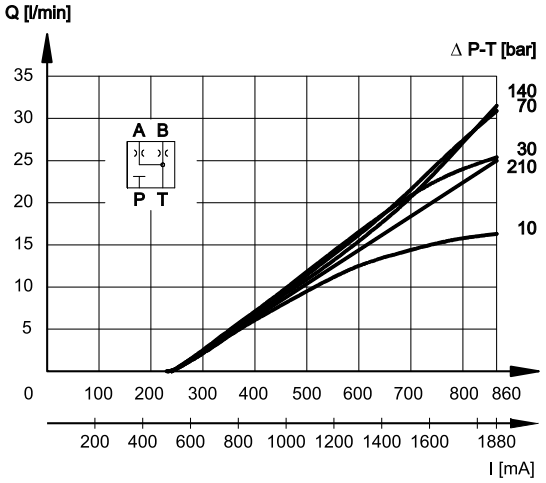

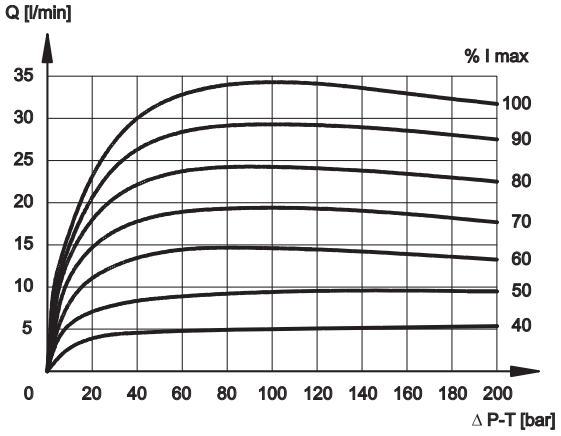

SPOOL TYPE A26

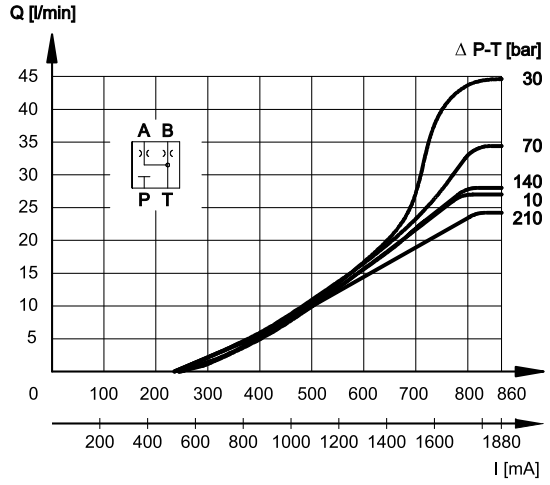

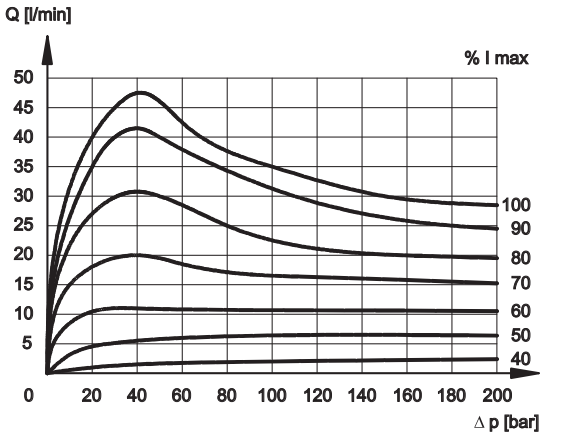

3 - DSE3K* OVERALL AND MOUNTING DIMENSIONS

DSE3K*-A*/10*-*K9T*/CM
DSE3K*-C*/10*-*K9T*/CM

dimensions in mm

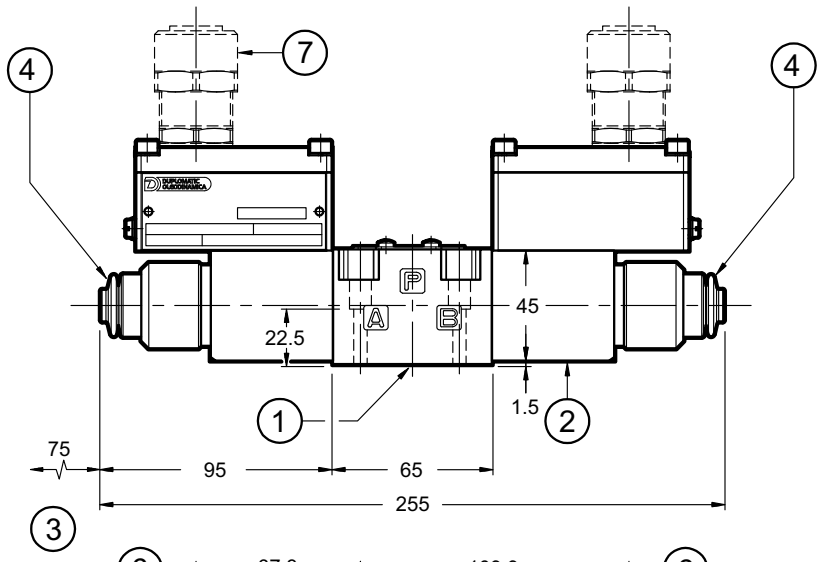

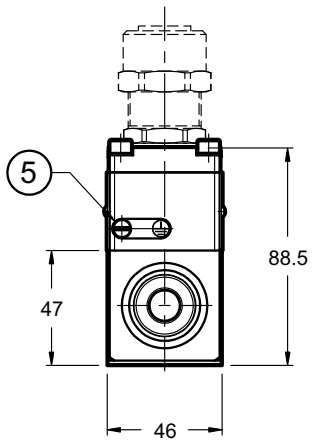

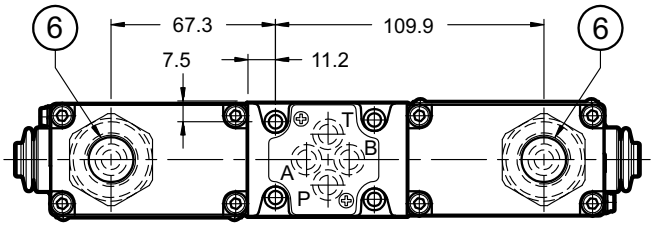

DSE3K*-*/10*-*K9S*/CM

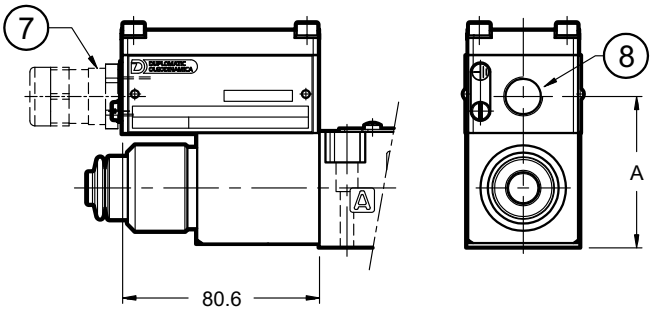

DSE3K*-A*SA/10*-*K9T*/CM
DSE3K*-C*SA/10*-*K9T*/CM

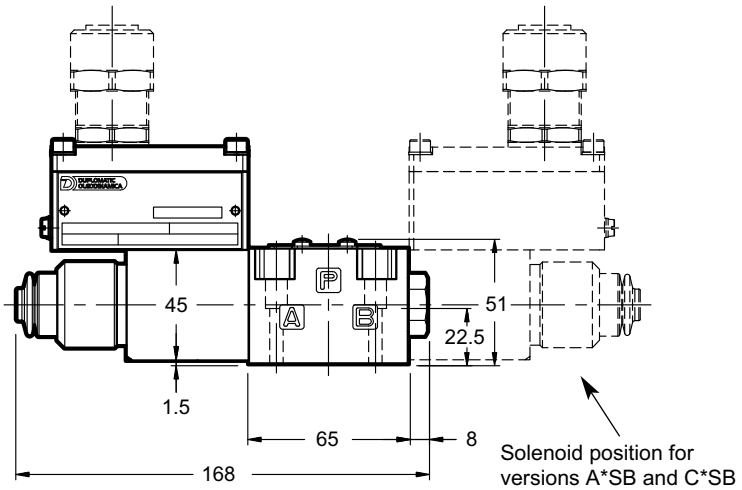

Side port type	Dimension A
S01, S04	60.5
S02, S03	60

1	Mounting surface with sealing rings: 4 OR type 2037 (9.25x1.78) - 90 Shore
2	Explosion-proof coil
3	Minimum clear space required
4	Manual override, boot protected (**standard for both N and V seals**) for blind ring nut dimensions (standard for NL seals) see par. 18
5	Terminal for supplementary GND connection
6	Upper port for cable gland
7	Cable gland. To be ordered separately, see par. 19
8	Side port for cable gland

Valve fastening: 4 SHC screws ISO 4762 M5x30
Tightening torque: 5 Nm (A8.8 screws)
Threads of mounting holes: M5x10

4 - IDENTIFICATION OF PILOT OPERATED SOLENOID VALVES DSPE*K*

4.1 - Identification code

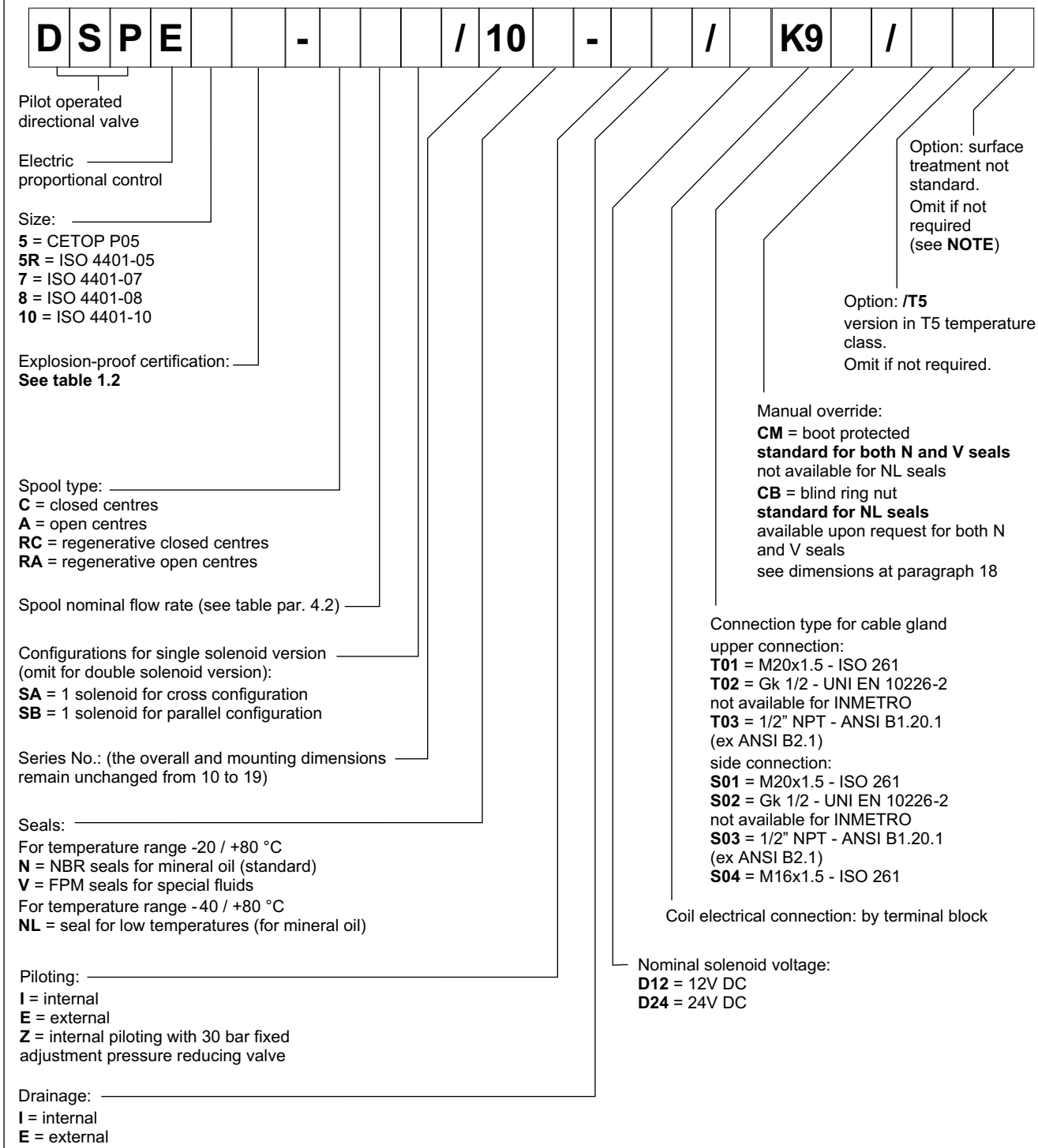

NOTE: the valves are supplied with standard surface treatment of phosphating black for the main body and zinc-nickel for the pilot body. Upon request we can supply these valves with full zinc-nickel surface treatment, suitable to ensure a salt spray resistance up to 600 h (test operated according to UNI EN ISO 9227 standards and test evaluation operated according to UNI EN ISO 10289 standards).

For full zinc-nickel surface treatment add **/W7** at the end of the identification code.

4.2 - Configurations

The valve configuration depends on the combination of the following elements: number of proportional solenoids, spool type, rated flow.

Configuration 2 solenoids:
3 positions with spring centering

1 solenoid for cross configuration "**SA**":
2 positions (central + external)
with spring centering

1 solenoid for parallel configuration "**SB**":
2 positions (central + external)
with spring centering

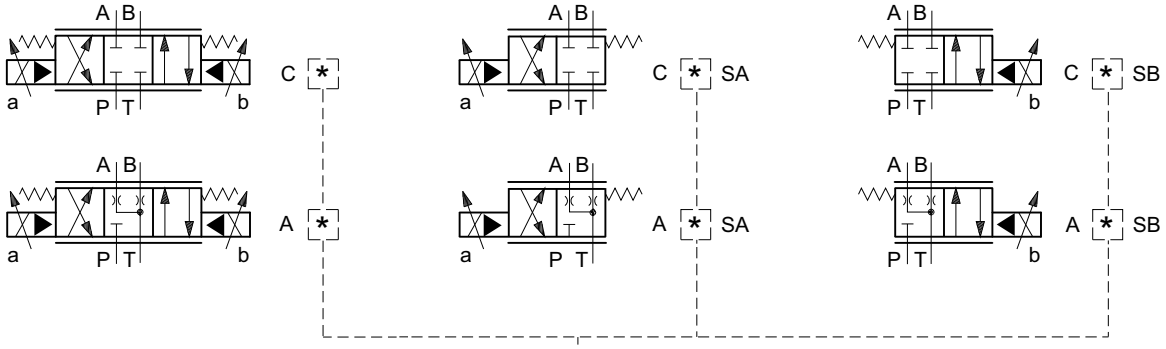

valve type	*	nominal flow rate with Δp 10 bar P-T
DSPE5K* DSPE5RK*	**80**	80 l/min
	80/40	80 (P-A) / 40 (B-T) l/min
DSPE7K*	**100**	100 l/min
	150	150 l/min
	150/75	150 (P-A) / 75 (B-T) l/min
DSPE8K*	**200**	200 l/min
	300	300 l/min
	300/150	300 (P-A) / 150 (B-T) l/min
DSPE10K*	**350**	350 l/min
	500	500 l/min
	500/250	500 (P-A) / 250 (B-T) l/min

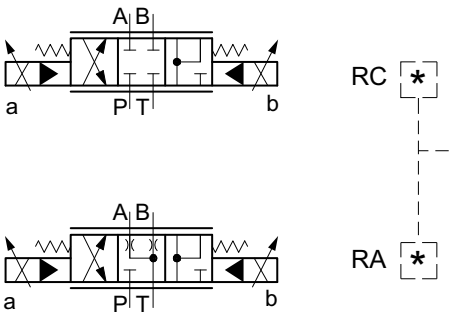

valve type	*	nominal flow rate with Δp 10 bar P-T
DSPE7K*	**150/75**	150 (P-A) / 75 (B-T) l/min
DSPE8K*	**300/150**	300 (P-A) / 150 (B-T) l/min
DSPE10K*	**500/250**	500 (P-A) / 250 (B-T) l/min

5 - CHARACTERISTIC CURVES OF PILOT OPERATED SOLENOID VALVES DSPE*K*

(obtained with mineral oil with viscosity of 36 cSt at 50°C and electronic control card)

Typical flow rate control curves at constant Δp according to current supply to the solenoid, measured for the available spool types.

The reference Δp values are measured between valve ports P and T.

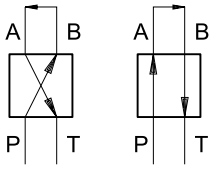

5.1 - Characteristic curves DSPE5K* and DSPE5RK

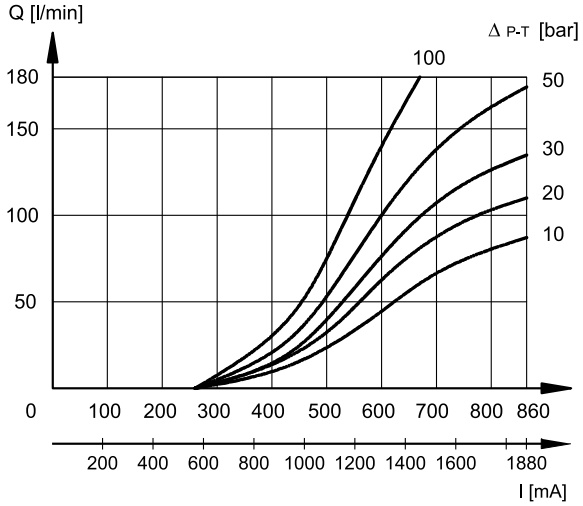

5.2 - Characteristic curves DSPE7K*

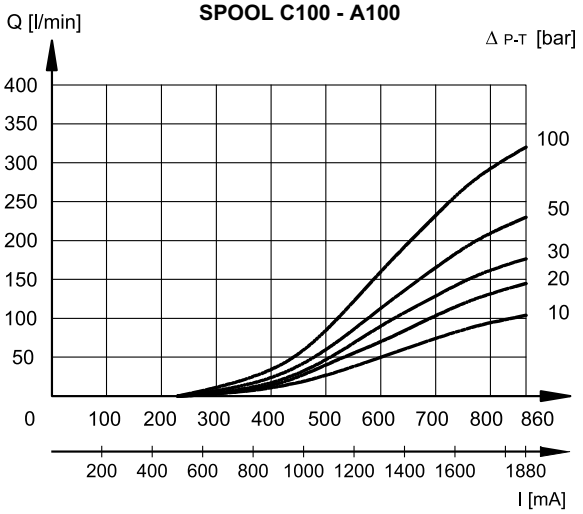

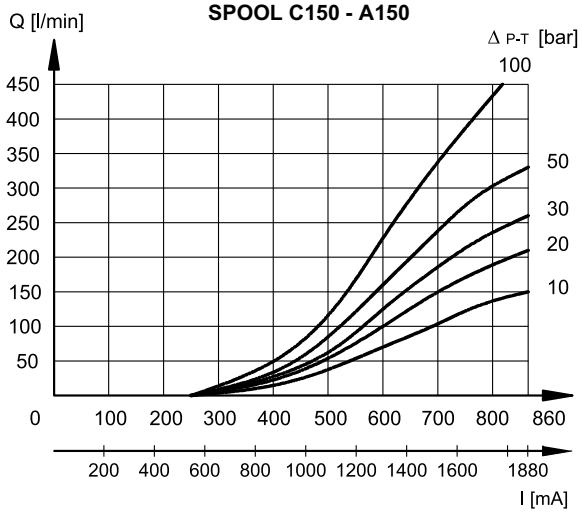

5.3 - Characteristic curves DSPE8K*

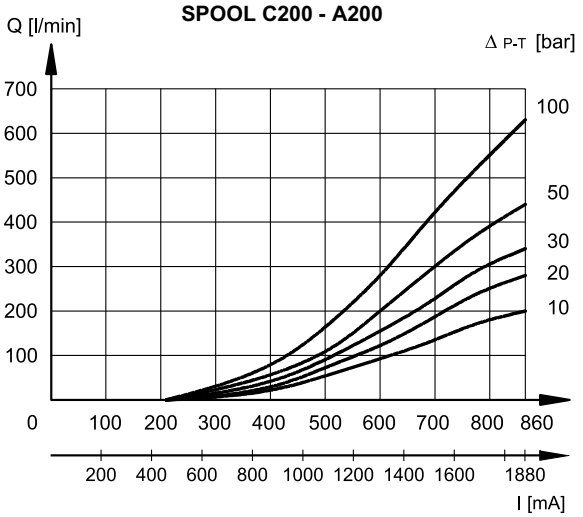

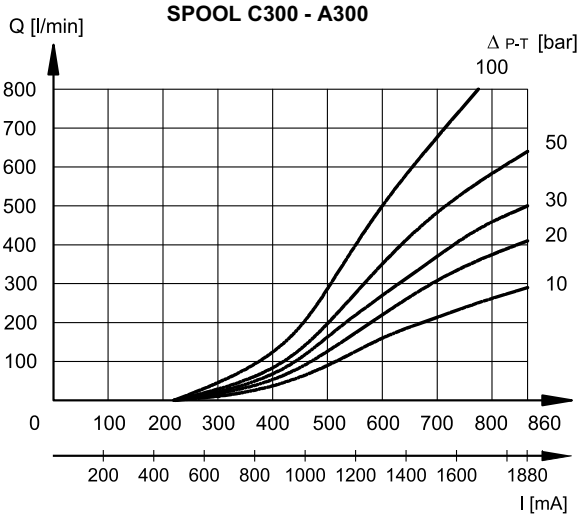

5.4 - Characteristic curves DSPE10K*

SPOOL C350 - A350

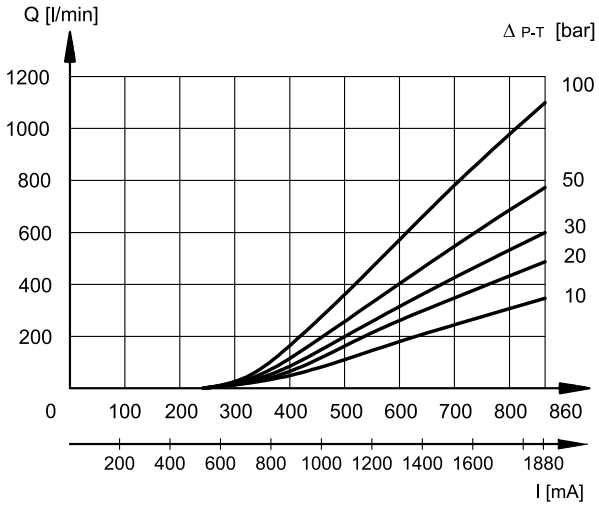

SPOOL C500 - A500

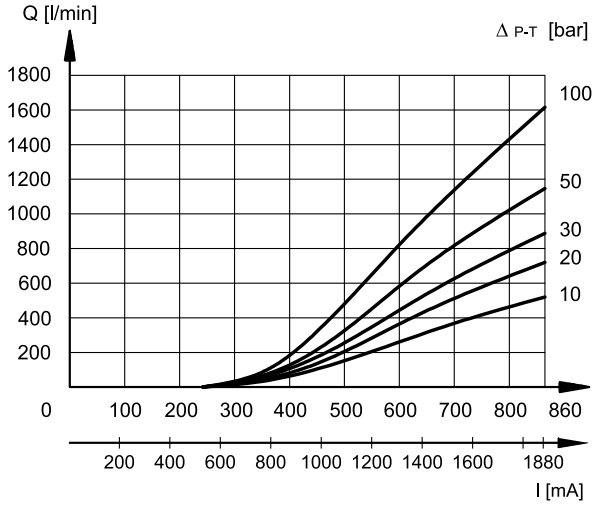

6 - STEP RESPONSE

(obtained with mineral oil with viscosity of 36 cSt at 50°C and electronic control card)

Step response is the time taken for the valve to reach 90% of the set pressure value following a step change of reference signal.

The table shows the typical step response tested with static pressure 100 bar.

REFERENCE SIGNAL	0 → 100%	100 → 0%
	Step response [ms]	
DSE3K*	50	40
DSPE5K* and DSPE5RK*	50	40
DSPE7K*	80	50
DSPE8K*	100	70
DSPE10K*	200	120

7 - HYDRAULICS CHARACTERISTICS

(obtained with mineral oil with viscosity of 36 cSt at 50°C and electronic control card)

FLOWS		**DSPE5K* DSPER5K***	**DSPE7K***	**DSPE8K***	**DSPE10K***
Max flow rate	l/min	180	450	800	1600
Piloting flow requested with operation 0 →100%	l/min	3	5	9	13
Piloting volume requested with operation 0 →100%	cm^3	1,7	3,2	9,1	21,6

PRESSURES	MIN	MAX
Piloting pressure on X port	30	210 (**NOTE**)
Pressure on T port with interal drain	–	10
Pressure on T port with external drain	–	250

NOTE: if the valve operates with higher pressures it is necessary to use the version with external pilot and reduced pressure. Otherwise, the valve with internal pilot and pressure reducing valve with 30 bar fixed adjustment can be ordered.

Add the letter **Z** to the identification code to order this option (see par. 4.1). Consider that, by adding the pressure reducing valve, the overall dimensions increase 40 mm in height.

8 - PILOTING AND DRAINAGE

DSPE*K* valves are available with piloting and drainage, both internal and external. The version with external drainage allows for a higher back pressure on the outlet.

DSPE5K*
DSPE5RK*

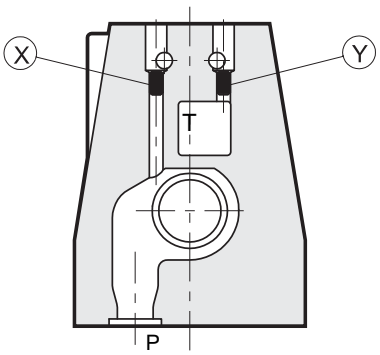

X: plug M5x6 for external pilot
Y: plug M5x6 for external drain

TYPE OF VALVE		Plug assembly	
		X	Y
IE	INTERNAL PILOT AND EXTERNAL DRAIN	NO	YES
II	INTERNAL PILOT AND INTERNAL DRAIN	NO	NO
EE	EXTERNAL PILOT AND EXTERNAL DRAIN	YES	YES
EI	EXTERNAL PILOT AND INTERNAL DRAIN	YES	NO

DSPE7K*

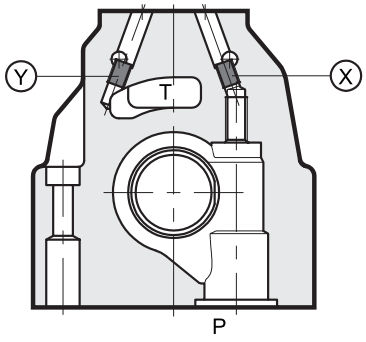

X: plug M6x8 for external pilot
Y: plug M6x8 for external drain

DSPE8K*

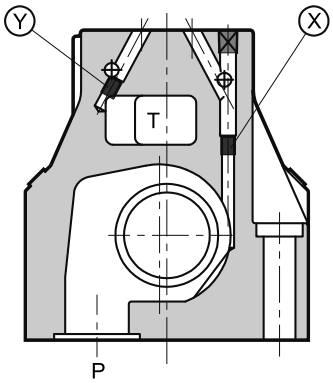

X: plug M6x8 for external pilot
Y: plug M6x8 for external drain

DSPE10K*

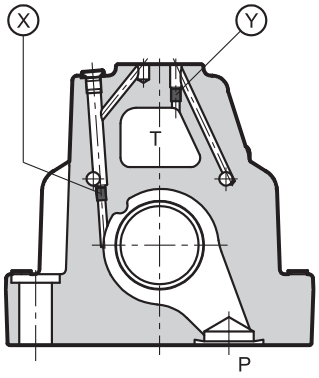

X: plug M6x8 for external pilot
Y: plug M6x8 for external drain

9 - ELECTRICAL CHARACTERISTICS

(values ± 5%)

NOMINAL VOLTAGE	V DC	**12**	**24**
RESISTANCE (AT 20°C)	Ω	3,4	15,6
NOMINAL CURRENT	A	1,88	0,86

DUTY CYCLE	100%
ELECTROMAGNETIC COMPATIBILITY (EMC)	According to 2014/30/EU
CLASS OF PROTECTION: Atmospheric agents Coil insulation (VDE 0580)	 IP66 / IP68 class H

9.1 - Wiring

In order to realise the electrical connection of the coil, it is necessary to access the terminal block (1) unscrewing the 4 screws (2) that fasten the cover (3) with the box (4) that contains the terminal block.

The electrical connection is polarity-independent.

By doing electrical connection it is important to connect also the grounding point (5) in the terminal block box (M4 screws), through suitable conductors with the general grounding line of the system.

On the external body of the coil there is a grounding point (6) (M4 screw) that allow to ensure equipotentiality between the valve and the general grounding line of the system; connecting this point the regulation of the EN 13463-1 standard, that impose to verify the equipotentiality of the elements included in a potentially explosive environment (the maximum resistance between the elements must be 100 Ω), is guaranteed.

At the end of the electrical wiring, it is necessary to reassemble the cover (3) on the box (4), checking the correct positioning of the seal located in the cover seat and fastening the 4 M5 screws with a torque of 4.9÷6 Nm.

Electrical wiring must be done following in compliance with standards about protection against explosion hazards

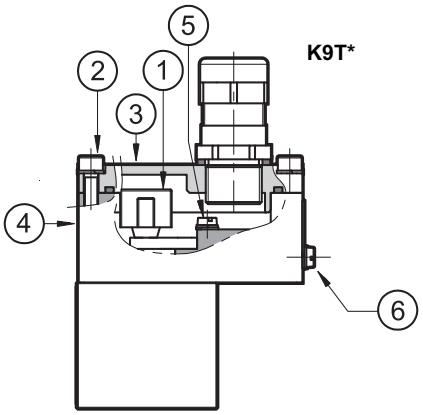

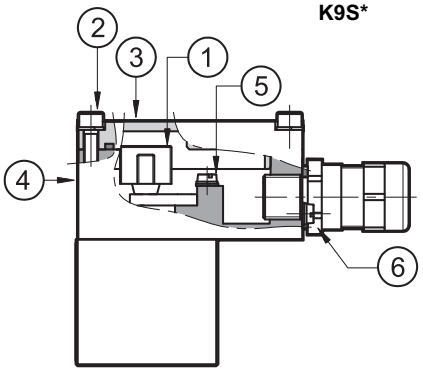

Characteristics of the cables connectable for wiring are indicated in the table below:

Function	Cable section
Operating voltage cables connection	max 2.5 mm²
Connection for internal grounding point	max 2.5 mm²
Connection for external equipotential grounding point	max 6 mm²

Cables for wiring must be non-armoured cables, with external covering sheath and must be suitable for use in environments with temperatures from - 20 °C to +110 °C (for valves either with N or V seals) or from - 40 °C to +110 °C (for valves with NL seals).

Cable glands (which must be ordered separately, see paragraph 19) allow to use cables with external diameter between 8 and 10 mm.

9.2 - Electrical diagrams

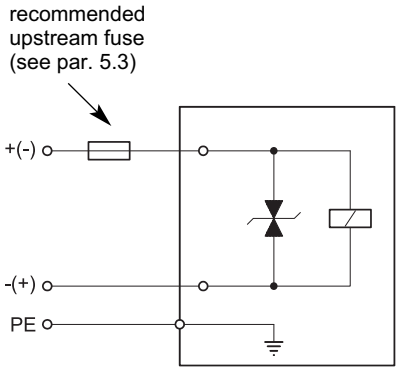

9.3 - Overcurrent fuse and switch-off voltage peak

Upstream of each valve, an appropriate fuse (max 3 x In according to IEC 60127) or a protective motor switch with short-circuit and thermal instantaneous tripping, as short-circuit protection, must be connected. The cut-off power of the fuse must correspond or exceed the short circuit current of the supply source. The fuse or the protective motor must be placed outside the dangerous area or they must be protected with an explosion-proof covering.

In order to safeguard the electronic device to which the valve is connected, there is a protection circuit in the coil, that reduces voltage peaks, which can occur when inductances are switched off.

The table shows the type of fuse recommended according to the nominal voltage of the valve and to the value of the voltage peaks reduction.

Coil type	Nominal voltage [V]	Rated current [A]	**Recommended pre-fuse characteristics medium time-lag according to DIN 41571 [A]**	Maximum voltage value upon switch off [V]	Suppressor circuit
D12	12	1,88	2,5	- 49	Transient voltage suppressor bidirectional
D24	24	0,86	1,25	- 49	

10 - DSPE5K* AND DSPE5RK* OVERALL AND MOUNTING DIMENSIONS

dimensions in mm

DSPE5K*-A*/10*-*/*K9T*/CM
DSPE5K*-C*/10*-*/*K9T*/CM

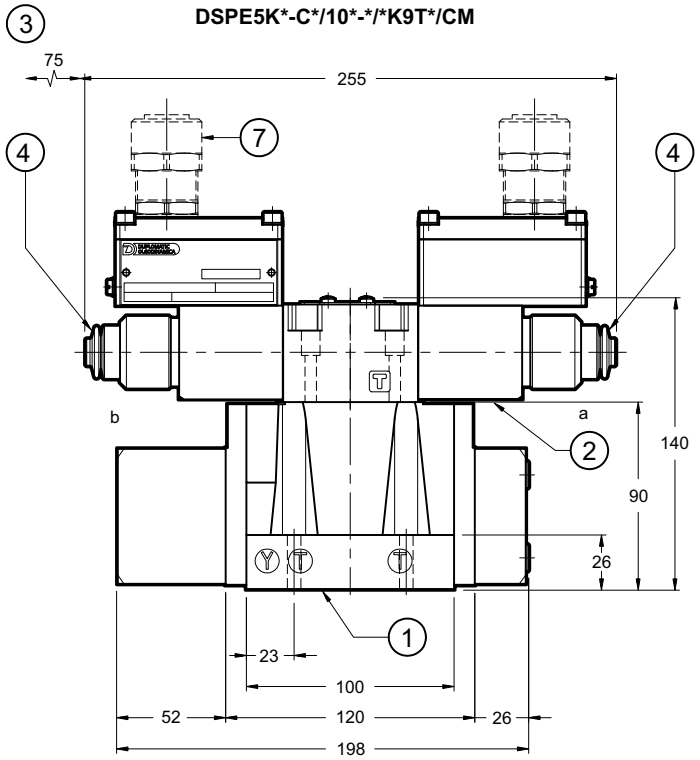

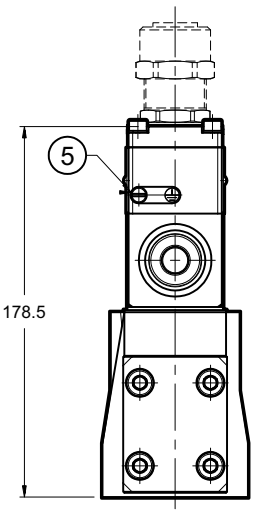

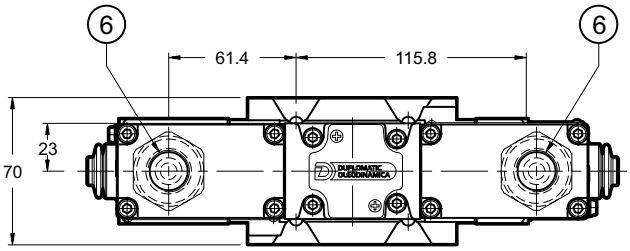

DSPE5K*-A*SA/10*-*/*K9T*/CM
DSPE5K*-C*SA/10*-*/*K9T*/CM

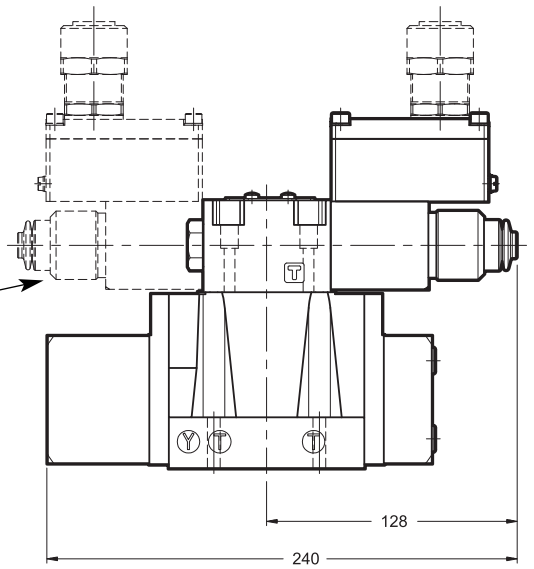

1	Mounting surface with sealing rings: 5 OR type 2050 (12.42x1.78) - 90 Shore 2 OR type 2037 (9.25x1.78) - 90 Shore
2	Explosion-proof coil
3	Minimum clear space required
4	Manual override, boot protected (**standard for both N and V seals**) - for blind ring nut dimensions (standard for NL seals) see par. 18
5	Terminal for supplementary GND connection
6	Upper port for cable gland
7	Cable gland. To be ordered separately, see paragraph 19

NOTE 1: for overall dimensions with Z option (fixed adjustment pressure reducing valve) consider an increase of 40 mm in height.

NOTE 2: for side port cable gland see paragraph 14.

Valve fastening: 4 SHC ISO 4762 screws M6x35
Tightening torque: 8 Nm (A8.8 screws)
Threads of mounting holes: M6x10

11 - DSPE7K* OVERALL AND MOUNTING DIMENSIONS

dimensions in mm

DSPE7K*-A*/10*-*/*K9T*/CM
DSPE7K*-C*/10*-*/*K9T*/CM

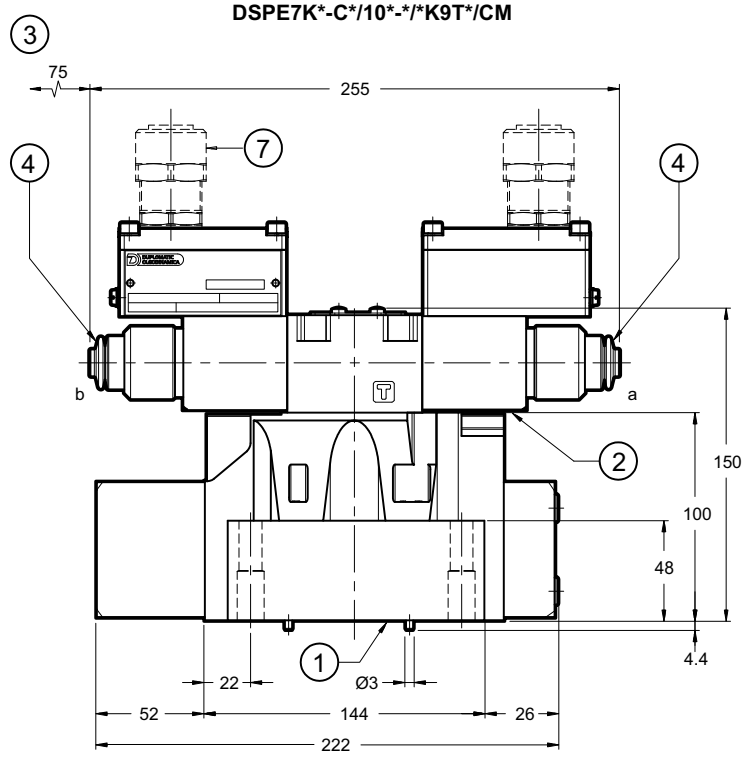

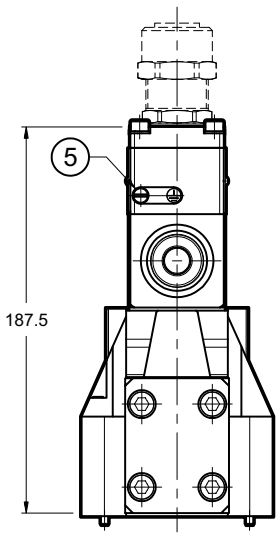

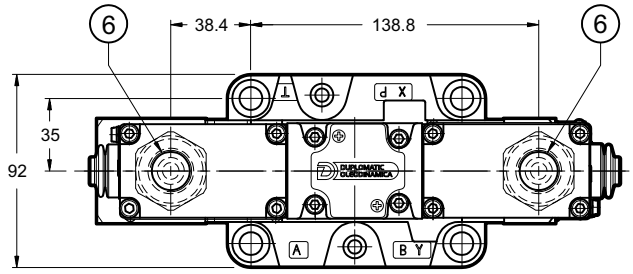

DSPE7K*-A*SA/10*-*/*K9T*/CM
DSPE7K*-C*SA/10*-*/*K9T*/CM

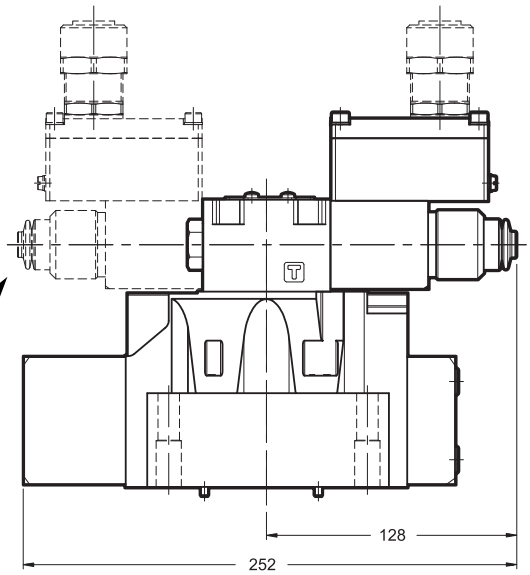

Solenoid position for versions A*SB and C*SB

NOTE 1: for overall dimensions with Z option (fixed adjustment pressure reducing valve) consider an increase of 40 mm in height.

NOTE 2: for side port cable gland see paragraph 14.

1	Mounting surface with sealing rings: 4 OR type 130 (22.22X2.62) - 90 Shore 2 OR type 2043 (10.82x1.78) - 90 Shore
2	Explosion-proof coil
3	Minimum clear space required
4	Manual override, boot protected (**standard for both N and V seals**) - for blind ring nut dimensions (standard for NL seals) see par. 18
5	Terminal for supplementary GND connection
6	Upper port for cable gland
7	Cable gland. To be ordered separately, see paragraph 19

Valve fastening: 4 SHC screws ISO 4762 M10x60 2 SHC screws ISO 4762 M6x60
Tightening torque: M10x60: 40 Nm (A8.8 screws) M6x60: 8 Nm (A8.8 screws)
Threads of mounting holes: M6x18; M10x18

12 - DSPE8K* OVERALL AND MOUNTING DIMENSIONS

dimensions in mm

DSPE8K*-A*/10*-*/*K9T*/CM
DSPE8K*-C*/10*-*/*K9T*/CM

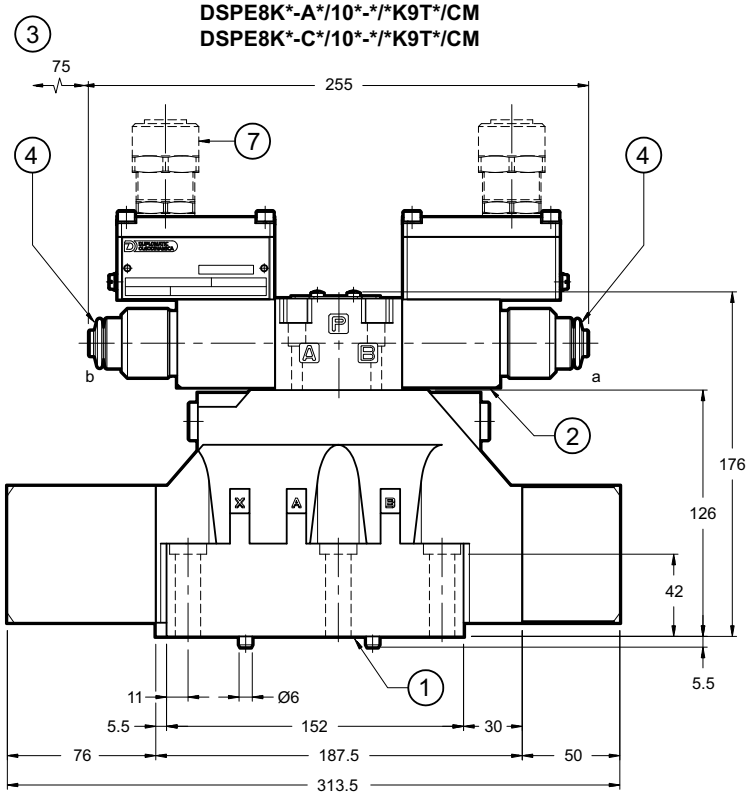

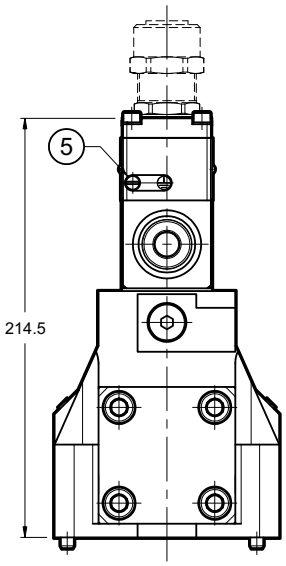

DSPE8K*-A*SA/10*-*/*K9T*/CM
DSPE8K*-C*SA/10*-*/*K9T*/CM

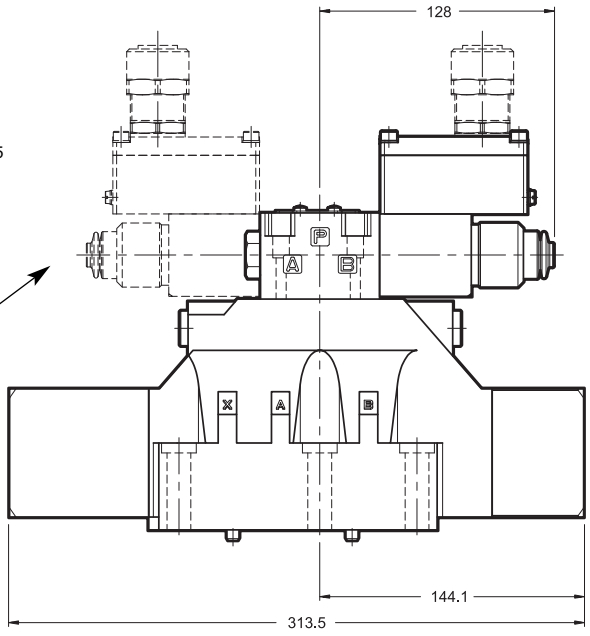

Solenoid position for versions A*SB and C*SB

NOTE 1: for overall dimensions with Z option (fixed adjustment pressure reducing valve) consider an increase of 40 mm in height.

NOTE 2: for side port cable gland see paragraph 14.

1	Mounting surface with sealing rings: 4 OR type 3118 (29.82x2.62) - 90 Shore 2 OR type 3081 (20.24x2.62) - 90 Shore
2	Explosion-proof coil
3	Minimum clear space required
4	Manual override, boot protected (**standard for both N and V seals**) - for blind ring nut dimensions (standard for NL seals) see par. 18
5	Terminal for supplementary GND connection
6	Upper port for cable gland
7	Cable gland. To be ordered separately, see paragraph 19

Valve fastening: 6 SHC ISO 4762 screws M12x60
Tightening torque: 69 Nm (A8.8 screws)
Threads of mounting holes: M12x20

13 - DSPE10K* OVERALL AND MOUNTING DIMENSIONS

dimensions in mm

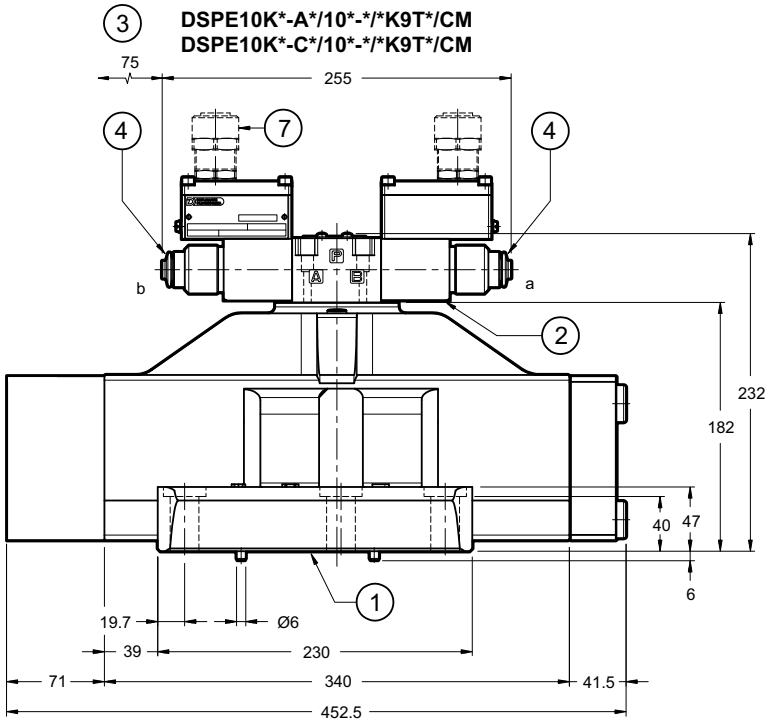

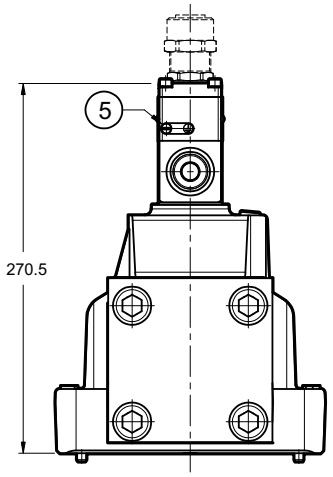

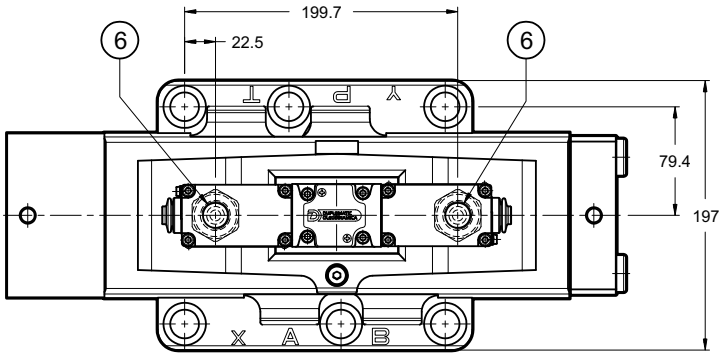

DSPE10K*-A*SA/10*-*/*K9T*/CM
DSPE10K*-C*SA/10*-*/*K9T*/CM

Solenoid position
for versions
A*SB and C*SB

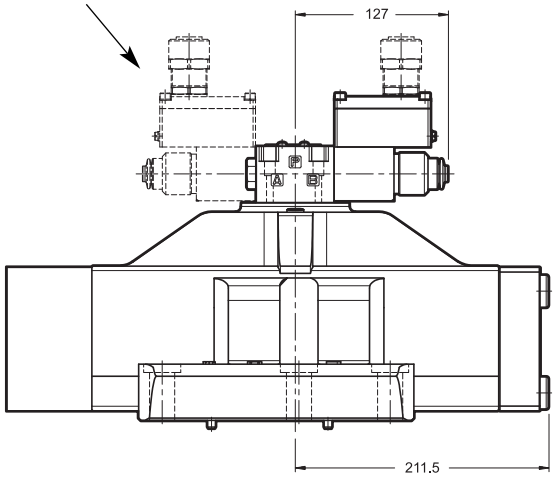

1	Mounting surface with sealing rings: 4 OR type 4150 (37.59x3.53) - 90 shore 2 OR type 3081 (20.24x2.62) - 90 shore
2	Explosion-proof coil
3	Minimum clear space required
4	Manual override, boot protected (**standard for both N and V seals**) - for blind ring nut dimensions (standard for NL seals) see par. 18
5	Terminal for supplementary GND connection
6	Upper port for cable gland
7	Cable gland. To be ordered separately, see paragraph 19

NOTE 1: for overall dimensions with Z option (fixed adjustment pressure reducing valve) consider an increase of 40 mm in height.

NOTE 2: for side port cable gland see paragraph 14.

Valve fastening: 6 SHC screws ISO 4762 M20x70
Tightening torque: 330 Nm (A8.8 screws)
Threads of mounting holes: M20x40

14 - DSPE*K*-*K9S* (SIDE CONNECTION) OVERALL AND MOUNTING DIMENSIONS

dimensions in mm

DSPE5K*-*K9S*
DSPE5RK*-*K9S*

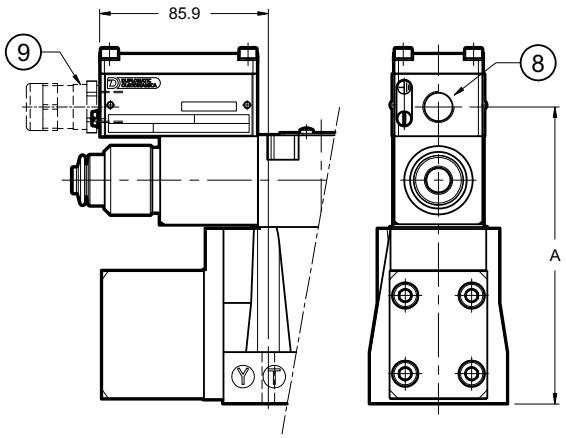

Side port type	Dimension A
S01, S04	150.5
S02, S03	150

DSPE7K*-*K9S*

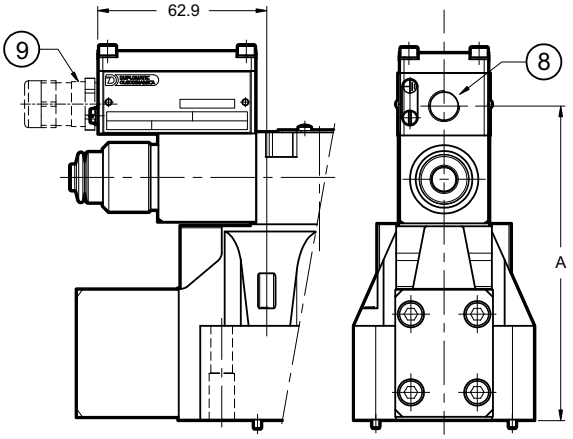

Side port type	Dimension A
S01, S04	157.5
S02, S03	157

DSPE8K*-*K9S*

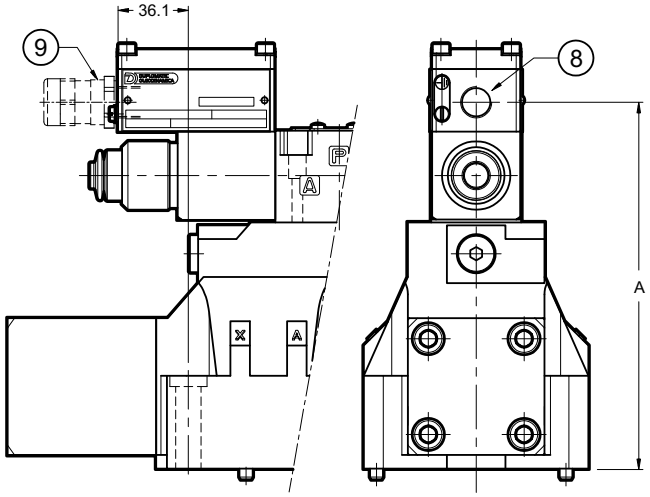

Side port type	Dimension A
S01, S04	186.5
S02, S03	186

DSPE10K*-*K9S*

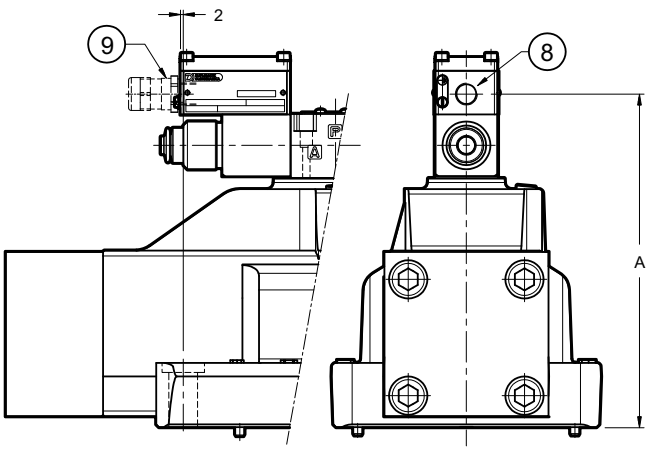

Side port type	Dimension A
S01, S04	242.5
S02, S03	242

8	Side port for cable gland
9	Cable gland. To be ordered separately, see par. 19

15 - MOUNTING SURFACES

DSE3K*
ISO 4401-03-02-0-05
(CETOP 4.2-4-03-350)

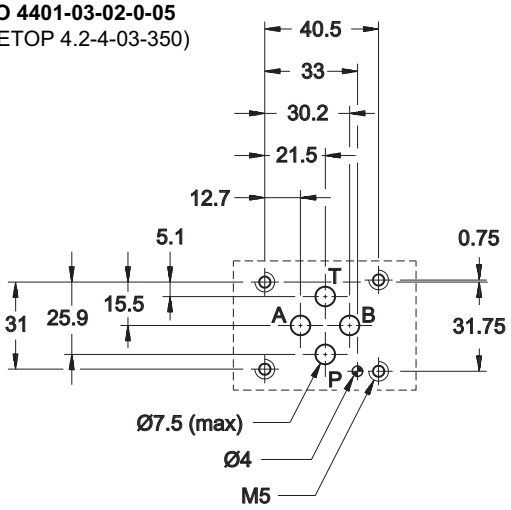

DSPE5K*
CETOP 4.2-4 P05-350

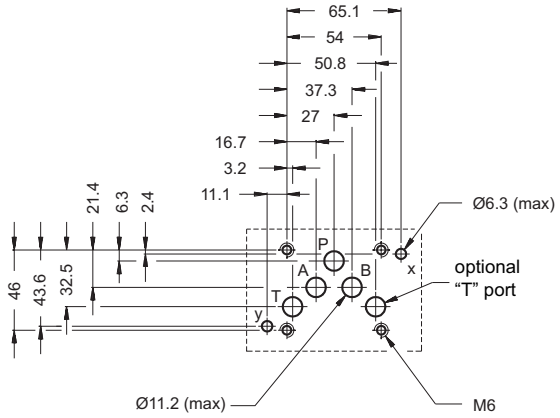

DSPE5RK*
ISO 4401-05-05-0-05
(CETOP 4.2-4 R05-350)

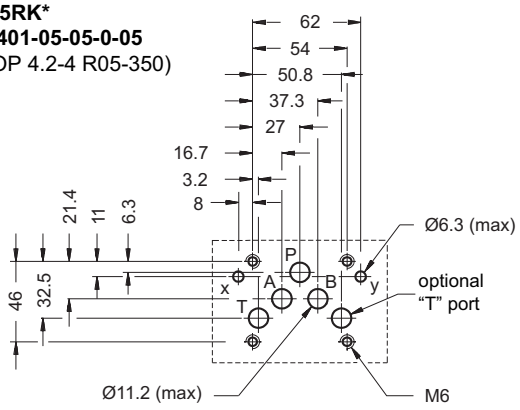

DSPE7K*
ISO 4401-07-07-0-05
(CETOP 4.2-4-07-350)

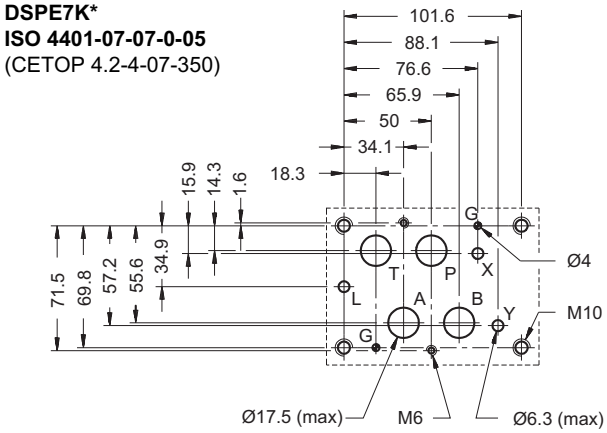

DSPE8K*
ISO 4401-08-08-0-05
(CETOP 4.2-4-08-350)

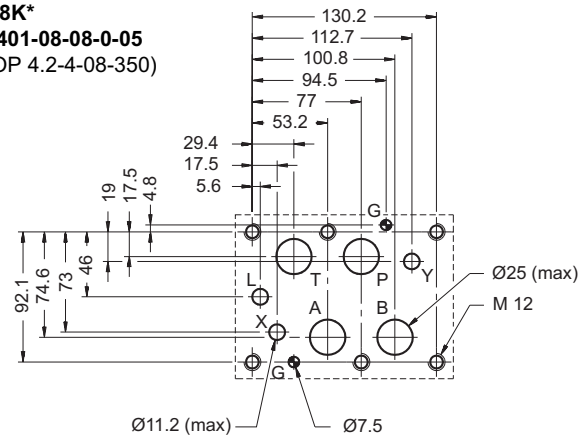

DSPE10K*
ISO 4401-10-09-0-05
(CETOP 4.2-4-10-350)

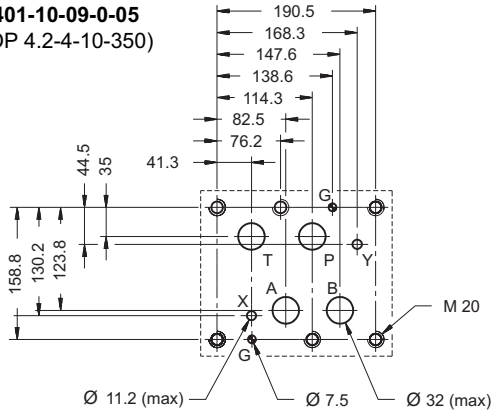

16 - HYDRAULIC FLUIDS

Use mineral oil-based hydraulic fluids HL or HM type, according to ISO 6743-4. For these fluids, use NBR seals (code N). For fluids HFDR type (phosphate esters) use FPM seals (code V). For the use of other fluid types such as HFA, HFB, HFC, please consult our technical department.

Using fluids at temperatures higher than 80 °C causes a faster degradation of the fluid and of the seals characteristics. The fluid must be preserved in its physical and chemical characteristics.

17 - INSTALLATION

Installation must adheres to instructions reported in the *Use and Maintenance manual*, always attached to the valve. Unauthorized interventions can be harmful to people and goods because of the explosion hazards present in potentially explosive atmospheres.

The valves can be installed in any position without impairing correct operation.

Valve fastening takes place by means of screws or tie rods, laying the valve on a lapped surface, with values of planarity and smoothness that are equal to or better than those indicated in the drawing.

If the minimum values of planarity or smoothness are not met, fluid leakages between valve and mounting surface can easily occur.

18 - MANUAL OVERRIDES

18.1 - CB - Blind ring nut

The metal ring nut protects the solenoid tube from atmospheric agents and isolates the manual override from accidental operations. The ring nut is tightened on a threaded fastener that keeps the coil in its position even without the ring nut.

To access the manual override loose the ring nut and remove it; then reassemble hand tightening, until it stops.

Activate the manual override always and only with non-sparking tools suitable for use in potentially explosive atmospheres.

More information on safe use of explosion-proof components are provided in the instruction manual, always supplied with the valve.

CAUTION!: The manual override doesn't allow any proportional regulation; indeed using this kind of override, the main stage spool will open completely and the whole inlet pressure will pass through A or B line.

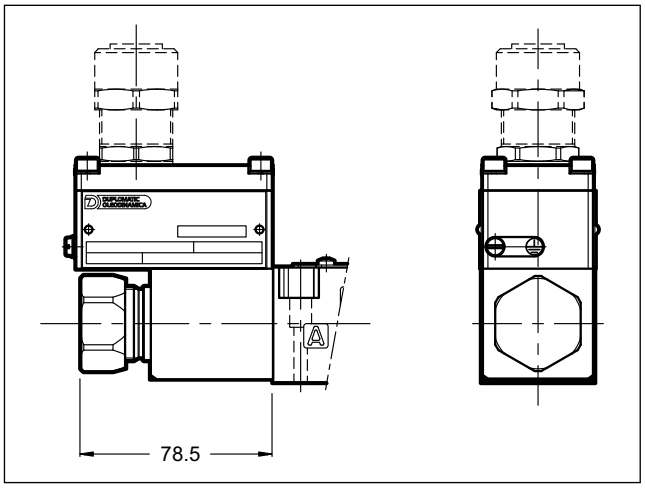

18.2 - CK Knob manual override

When the set screw is screwed and its point is aligned with the edge of the knob, tighten the knob till it touches the spool: in this position the override is not engaged and the valve is de-energized. After adjusting the override, tighten the set screw in order to avoid the knob loosing. Available for DC valves only.

Spanner: 3 mm

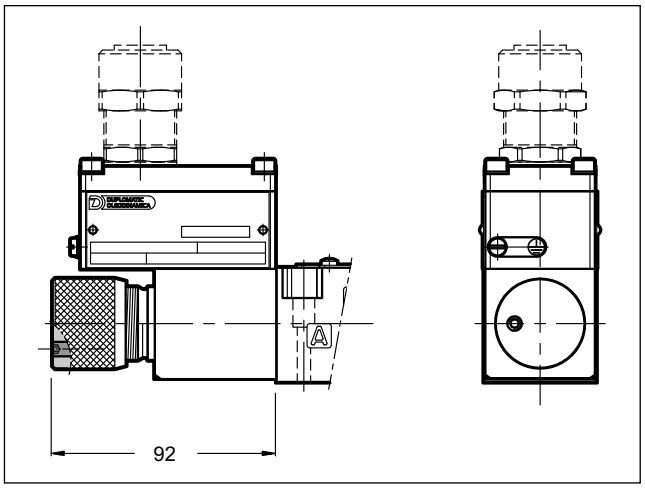

18.3 - CH - Lever manual override

The seals choice leads the type of the standard ring nut to be mounted. The lever device is always placed at valve side A.

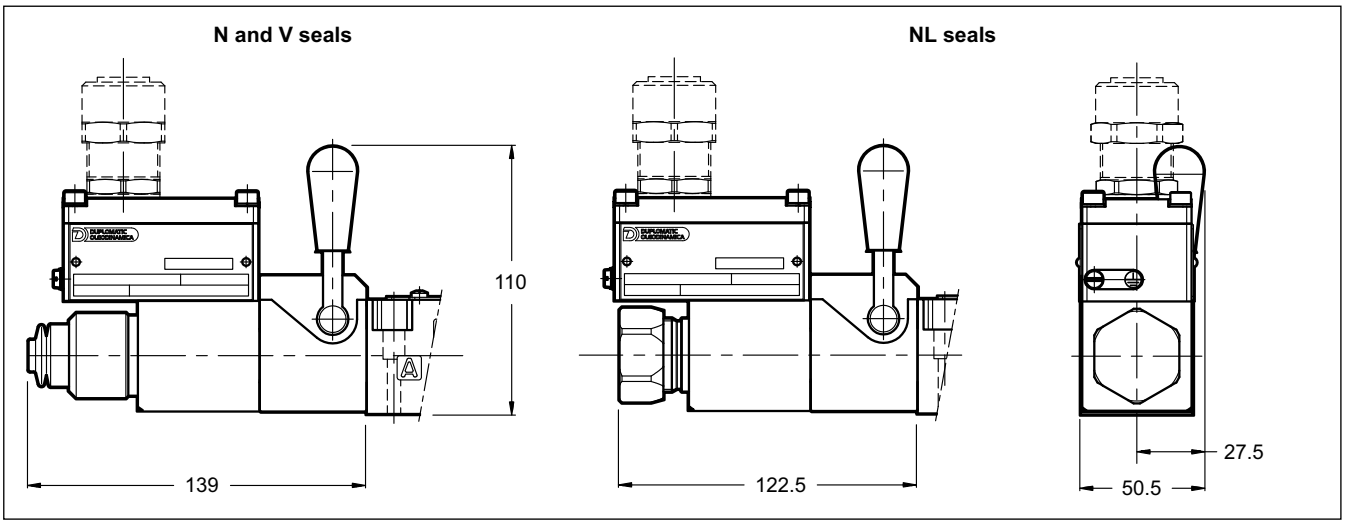

19 - CABLE GLANDS

Cable glands must be ordered separately; Duplomatic offers some types of cable glands with the following features:

- version for non-armoured cable, external seal on the cable (suitable for Ø 8÷10 mm cables);
- ATEX II 2GD, I M2; IECEx Gb, Db, Mb; INMETRO Gb, Db, Mb certified
- cable gland material: nickel brass
- rubber tip material: silicone
- ambient temperature range: -70 ºC ÷ +220 ºC
- protection degree: IP66/IP68

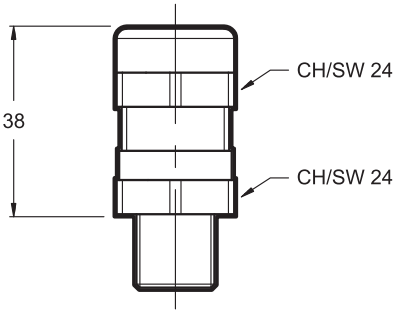

To order the desired cable glands, specify description, code and quantity.

Description: CGK2/NB-01/10

Code: 3908108001

M20x1.5 - ISO 261 male thread, suitable for coils with T01 and S01 connections. It is supplied equipped with copper washer, that must be assembled between the cable gland and the coil, so as to ensure IP66/IP68 protection degree.

Tightening torque: 45 ÷ 50 Nm

Description: CGK2/NB-02/10

Code: 3908108002

Gk 1/2 - UNI EN 10226-2 male thread, suitable for coils with T02 and S02 connections. The customer must apply LOCTITE® 243™ threadlocker or similar between the cable gland connection thread and the coil in order to ensure IP66/IP68 protection degree.

Tightening torque: 20 ÷ 25 Nm

Description: CGK2/NB-03/10

Code: 3908108003

1/2” NPT - ANSI B1.20.1 (ex ANSI B2.1), suitable for coils with T03 and S03 connections. The customer must apply LOCTITE® 243™ threadlocker or similar between the cable gland connection thread and the coil in order to ensure IP66/IP68 protection degree.

Tightening torque: 20 ÷ 25 Nm

Description: CGK2/NB-04/10

Code: 3908108004

M16x1.5 - ISO 261 male thread, suitable for coils with S04 connection. It is supplied equipped with copper washer, that must be assembled between the cable gland and the coil, so as to ensure IP66/IP68 protection degree.

Tightening torque: 45 ÷ 50 Nm

20 - ELECTRONIC CONTROL UNITS

DSE3K* - * * SA **DSE3K* - * * SB**

EDM-M112	for solenoid 24V DC	DIN EN 50022 rail mounting	see cat. 89 250
EDM-M142	for solenoid 12V DC		

NOTE: electronic control units offered are not explosion proof certified; therefore, they must be installed outside the classified area.

DSE3K* - A* **DSE3K* - C***

EDM-M212	for solenoid 24V DC	DIN EN 50022 rail mounting	see cat. 89 250
EDM-M242	for solenoid 12V DC		

DSPE*K* - * * SA **DSPE*K* - * * SB**

EDM-M111	for solenoid 24V DC	DIN EN 50022 rail mounting	see cat. 89 250
EDM-M141	for solenoid 12V DC		

DSPE*K* - A* **DSPE*K* - C***

EDM-M211	for solenoid 24V DC	DIN EN 50022 rail mounting	see cat. 89 250
EDM-M241	for solenoid 12V DC		

21 - SUBPLATES

(see catalogue 51 000)

	DS3K*	**DSP5K***	**DSP7K***	**DSP8K***
Type with rear ports	PMMD-AI3G	PME4-AI5G	PME07-AI6G	-
Type with side ports	PMMD-AL3G	PME4-AL5G	PME07-AL6G	PME5-AL8G
P, T, A, B ports dimensions X, Y ports dimensions	3/8” BSP -	3/4” BSP 1/4” BSP	1” BSP 1/4” BSP	1 ½” BSP 1/4” BSP

NOTE: Subplates (to be ordered separately) do not contain neither aluminium nor magnesium at a rate higher than the value allowed by norms according to ATEX directive for category II 2GD and I M2.

The user will bear to do the complete assessment of the ignition risk that can occur from the relative use in potentially explosive environments.

DUPLOMATIC OLEODINAMICA

DUPLOMATIC OLEODINAMICA S.p.A.
20015 PARABIAGO (MI) • Via M. Re Depaolini 24
Tel. +39 0331.895.111
Fax +39 0331.895.339
www.duplomatic.com • e-mail: sales.exp@duplomatic.com

REPRODUCTION IS FORBIDDEN. THE COMPANY RESERVES THE RIGHT TO APPLY ANY MODIFICATIONS.