Double Pump Operating Specifications

Shaft end pump

Model Series	Delivery USgpm @ 1200 r/min 7 bar (100 psi)	Displ. cm^3/r (in^3/r)	Max. r/min	Max. bar (psi)	Typical del. L/min (USgpm) @ max. speed & pressure	Typical input kW (hp) @ max. speed & pressure	Weight kg (lb.)
V2010,	6	19,5 (1.19)	3000	172 (2500)	54,9 (14.5)	18,3 (24.5)	
V2010F	7	22,8 (1.39)	3000	172 (2500)	63,3 (16.7)	22,0 (29.5)	
&	8	26,6 (1.62)	2800	172 (2500)	67,1 (17.7)	24,2 (32.5)	
V2010P	9	29,7 (1.81)	2800	172 (2500)	75,0 (19.8)	26,5 (35.5)	13,6 (30)
	11	36,4 (2.22)	2500	172 (2500)	86,8 (22,9)	28,0 (37.5)	
	12	39,0 (2.38)	2400	152 (2200)	87,2 (23.0)	26,8 (36.0)	
	13	42,5 (2.59)	2400	152 (2200)	98,1 (25.9))	29,1 (39.0)	
V2020,	6	19,5 (1.19)	3000	172 (2500)	54,9 (14.5)	19,4 (26.0)	
V2020F	7	22,8 (1.39)	3000	172 (2500)	63,3 (16.7)	22,0 (29.5)	
&	8	26,6 (1.62)	2800	172 (2500)	67,1 (17.7)	24,2 (32.5)	
V2020P	9	29,7 (1.81)	2800	172 (2500)	75,0 (19,8)	26,5 (35,5)	15,9 (35)
	11	36,4 (2.22)	2500	172 (2500)	86,8 (22.9)	28,0 (37.5)	
	12	39,0 (2.38)	2400	152 (2200)	87,2 (23.0)	26,8 (36.0)	
	13	42,5 (2.59)	2400	152 (2200)	98,1 (25.9)	29,1 (39.0)	

Cover end pump

V2010,	1	3,3 (.20)	3000	172 (2500)	7,6 (2.0)	3,4 (4.5)	
V2010F	2	6,6 (.40)	3000	172 (2500)	17,8 (4.7)	6,7 (9.0)	
&	3	9,8 (.60)	3000	172 (2500)	26,5 (7.0)	10,0 (13.4)	
V2010P	4	13,1 (.80)	3000	172 (2500)	36,0 (9.5)	13,4 (18.0)	13,6 (30)
	5	16,4 (1.00)	3000	172 (2500)	45,4 (12.0)	16,0 (21.5)	
	6	19,5 (1.19)	3000	152 (2200)	55,3 (14.6)	18,3 (24.5)	
	7	22,8 (1.39)	2800	138 (2000)	60,6 (16.0)	17,9 (24.0)	
V2020,	6	19,5 (1.19)	3000	172 (2500)	54,9 (14.5)	19,4 (26.0)	
V2020F	7	22,8 (1.39)	3000	172 (2500)	62,5 (16.5)	22,4 (30.0)	
&	8	26,5 (1.62)	2800	172 (2500)	66,2 (17.5)	24,2 (32.5)	15,9 (35)
V2020P	9	29,7 (1.81)	2800	172 (2500)	75,7 (20.0)	26,8 (36.0)	
	11	36,4 (2.22)	2500	172 (2500)	87,1 (23.0)	28,0 (37.5)	

NOTE: Review "Applying Vane Units" page 7, prior to selection of pump.

Model Codes

V 2020 F - 1 F 13 S 11 S - 1 CC 8H 30 L

1 2 3 4 5 6 7 8 9 10 11 12 13 14

1 Vane pump

2 Series
V2010 or V2020

3 Integral valve options
(Omit if not required)
F – Flow control & relief
P – Priority valve & relief

4 Mounting
1 – 2-bolt flange (SAE "B" size pad)
6 – 2-bolt flange (SAE "A" size pad)

5 Inlet port connections
D – 4-bolt flange 2.00 dia. (V2020)
1.50 dia. (V2010)

6 Shaft end pump
SAE rated capacity – USgpm
(1200 rpm & 100 psi)

6 - 6 USgpm	**11** - 11 USgpm
7 - 7 USgpm	**12** - 12 USgpm
8 - 8 USgpm	**13** - 13 USgpm
9 - 9 USgpm	

7 No. 1 outlet port (shaft end)
S – 1.062 - 12 UN-2B thd.

8 Cover end pump
SAE rated capacity – USgpm
(1200 rpm & 100 psi)

V2020:
6 – 6 USgpm
7 – 7 USgpm
8 – 8 USgpm
9 – 9 USgpm
1 – 11 USgpm

V2010:
1 – 1 USgpm
2 – 2 USgpm
3 – 3 USgpm
4 – 4 USgpm
5 – 5 USgpm
6 – 6 USgpm
7 – 7 USgpm

9 No. 2 Outlet port (cover end)
(See table)

10 Shafts
1 – Straight keyed
3 – Threaded with Woodruff key
11 –Splined

11 Position of outlet
(Viewed from cover end of pump)
V2020
With no. 1 outlet opposite inlet
AA – No. 2 outlet opposite inlet
AB – No. 2 outlet 90° CCW from inlet
AC – No. 2 outlet in line with inlet
AD – No. 2 outlet 90° CW from inlet
With no. 1 outlet 90° CCW from inlet
BA – No. 2 outlet opposite inlet
BB – No. 2 outlet 90° CCW from inlet
BC – No. 2 outlet in line with inlet
BD – No. 2 outlet 90° CW from inlet
With no. 1 outlet inline with inlet
CA – No. 2 outlet opposite inlet
CB – No. 2 outlet 90° CCW from inlet
CC – No. 2 outlet in line with inlet
CD – No. 2 outlet 90° CW from inlet
With no. 1 outlet 90° CW from inlet
DA – No. 2 outlet opposite inlet
DB – No. 2 outlet 90° CCW from inlet
DC – No. 2 outlet in line with inlet
DD – No. 2 outlet 90° CW from inlet

V2010
With no. 1 outlet opposite inlet
AA – No. 2 outlet 135° CCW from inlet
AB – No. 2 outlet 45° CCW from inlet
AC – No. 2 outlet 45° CW from inlet
AD – No. 2 outlet 135° CW from inlet
With no. 1 outlet 90° CCW from inlet
BA – No. 2 outlet 135° CCW from inlet
BB – No. 2 outlet 45° CCW from inlet
BC – No. 2 outlet 45° CW from inlet
BD – No. 2 outlet 135° CW from inlet
With no. 1 outlet in line with inlet
CA – No. 2 outlet 135° CCW from inlet
CB – No. 2 outlet 45° CCW from inlet
CC – No. 2 outlet 45° CW from inlet
CD – No. 2 outlet 135° CW from inlet
With no. 1 outlet 90° CW from inlet
DA – No. 2 outlet 135° CCW from inlet
DB – No. 2 outlet 45° CCW from inlet
DC – No. 2 outlet 45° CW from inlet
DD – No. 2 outlet 135° CW from inlet

12 Integral valves

Orifice No. Flow rate l/min (USgpm)	**Relief valve setting bar (psi)**	
1 – 4 (1)	**A** – 17 (250)	**G** –120 (1750)
2 – 8 (2)	**B** – 35 (500)	**H** –140 (2000)
3 – 11 (3)	**C** – 52 (750)	**J** – 155 (2250)
4 – 15 (4)	**D** – 70 (1000)	**K** – 175 (2500)
6 – 22 (6)	**E** – 86 (1250)	
8 – 30 (8)	**F** – 100 (1500)	

13 Design
Subject to change. Installation dimensions remain the same for designs –10 thru –19 (V2010) and –30 thru –39 (V2020).

14 Shaft Rotation
(Viewed from shaft end of pump)
L – Left hand for counterclockwise
Omit for right hand.

No. 2 Outlet port

Code	Std. cover	Flow control cover		Priority valve cover		
		Pressure	Tank	Primary outlet	Secondary outlet	Tank
K	–	–	–	9/16-18 St. thd. (V2010P)	3/4-16 St. thd. (V2010P)	9/16-18 St. thd. (V2010P)
P		3/4-16 St. thd. (V2010 & V2020F)	1/2" NPT thd. (V2010F & V2020F)	–	–	–
S	3/4"–16 St. thd. (V2010 only)	–	–	–	–	–
	1-1/16–12 St. thd. (V2020 only)	3/4-16. St. thd (V2020F)	1-1/16–12 St. thd. (V2020F)	–	–	–
T	–	3/4-16 St. thd. (V2010F & V2020F)	3/4-16 St. thd. (V2010F & V2020F)	3/4-16 St. thd. (V2020P)	7/8-14 St. thd. (V2020P)	3/4-16 St. thd. (V2020P)

Installation Dimensions

V2010 Series

Dimensions in millimeters (inches).
Shaft options shown on page 85.

Rated Delivery, gpm @ 1200 rpm & 100 psi		Dimensions		
Shaft end	**Cover end**	**A**	**B**	**C**
7,8 or 9	1, 2 or 3	213,1 (8.39)	189,2 (7.45)	113,3 (4.46)
7,8 or 9	4 or 5	219,5 (8.64)	195,6 (7.70)	113,3 (4.46)
7,8 or 9	6 or 7	224,5 (8.84)	200,7 (7.90)	113,3 (4.46)
11	1, 2 or 3	218,2 (8.59)	194,3 (7.65)	118,1 (4.65)
11	4 or 5	224,5 (8.84)	200,7 (7.90)	118,1 (4.65)
11	6 or 7	229,6 (9.04)	205,7 (8.10)	121,7 (4.79)
12 or 13	1, 2 or 3	221,7 (8.73)	197,9 (7.79)	121,7 (4.79)
12 or 13	4 or 5	227,8 (8.97)	204,0 (8.03)	121,7 (4.79)
12 or 13	6 or 7	232,9 (9.17)	209,0 (8.23)	121,7 (4.79)

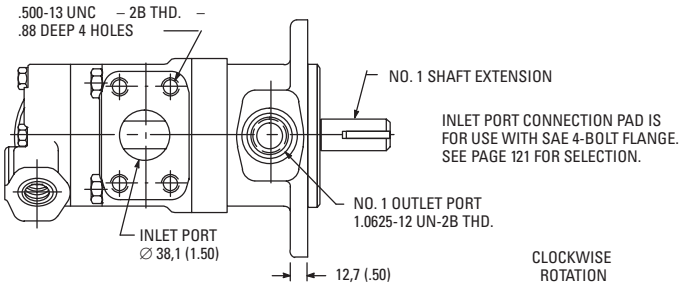

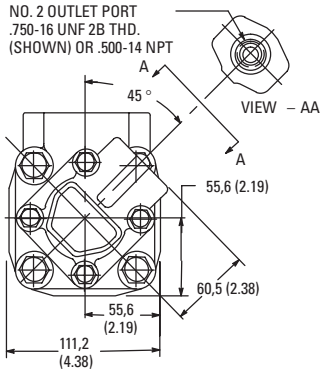

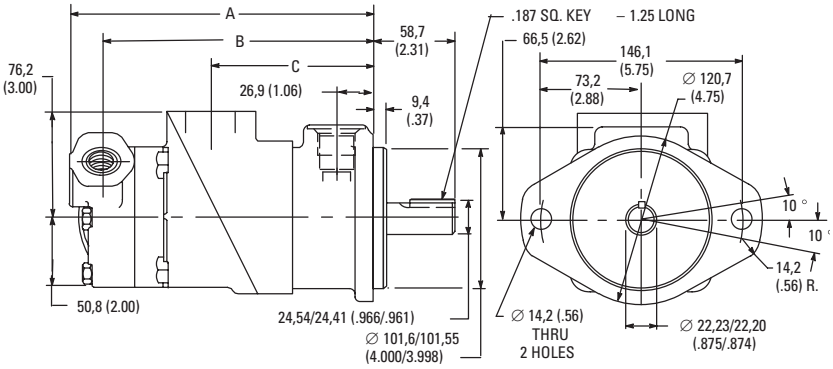

V2010F Series

Dimensions in millimeters (inches).
Shaft options shown on page 85.

Rated Delivery, gpm @ 1200 rpm & 100 psi		Dimensions		
Shaft end	**Cover end**	**A**	**B**	**C**
7,8 or 9	1, 2 or 3	226,1 (8.90)	206,8 (8.14)	113,3 (4.46)
7,8 or 9	4 or 5	232,4 (9.15)	213,1 (8.39)	113,3 (4.46)
7,8 or 9	6 or 7	237,5 (9.35)	218,2 (8.59)	113,3 (4.46)
11	1, 2 or 3	230,9 (9.09)	211,6 (8.33)	118,1 (4.65)
11	4 or 5	237,2 (9.34)	217,9 (8.58)	118,1 (4.65)
11	6 or 7	242,3 (9.54)	223,0 (8.78)	121,7 (4.79)
12 or 13	1, 2 or 3	234,4 (9.23)	215,1 (8.47)	121,7 (4.79)
12 or 13	4 or 5	240,8 (9.48)	221,5 (8.72)	121,7 (4.79)
12 or 13	6 or 7	245,9 (9.68)	226,6 (8.92)	121,7 (4.79)

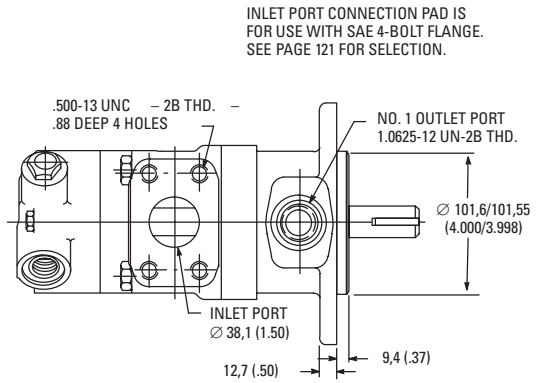

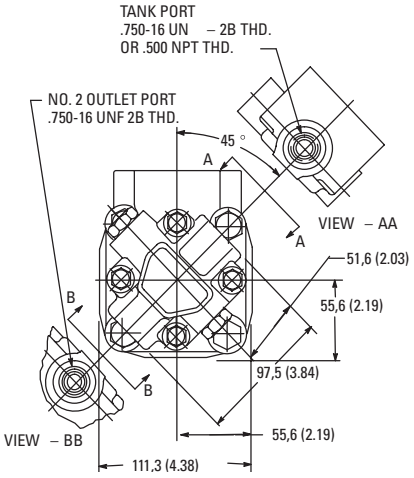

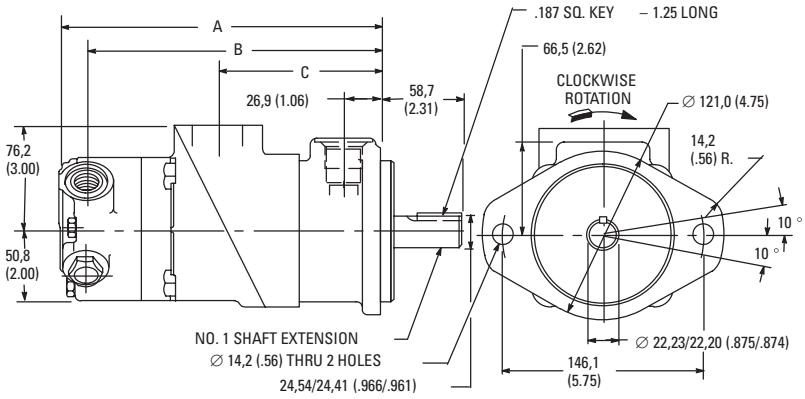

Installation Dimensions

V2010 Series

Dimensions in millimeters (inches).
Shaft options shown on page 85.

Rated Delivery, gpm @ 1200 rpm & 100 psi		Dimensions		
Shaft end	**Cover end**	**A**	**B**	**C**
7,8 or 9	1, 2 or 3	227,6 (8.96)	206,8 (8.14)	113,3 (4.46)
7,8 or 9	4 or 5	249,2 (9.21)	213,1 (8.39)	113,3 (4.46)
7,8 or 9	6 or 7	239,0 (9.41)	218,2 (8.59)	113,3 (4.46)
11	1, 2 or 3	232,4 (9.15)	211,6 (8.33)	118,1 (4.65)
11	4 or 5	238,8 (9.40)	217,9 (8.58)	118,1 (4.65)
11	6 or 7	243,8 (9.60)	223,0 (8.78)	121,7 (4.79)
12 or 13	1, 2 or 3	236,0 (9.29)	215,1 (8.47)	121,7 (4.79)
12 or 13	4 or 5	242,3 (9.54)	221,5 (8.72)	121,7 (4.79)
12 or 13	6 or 7	247,4 (9.74)	226,6 (8.92)	121,7 (4.79)

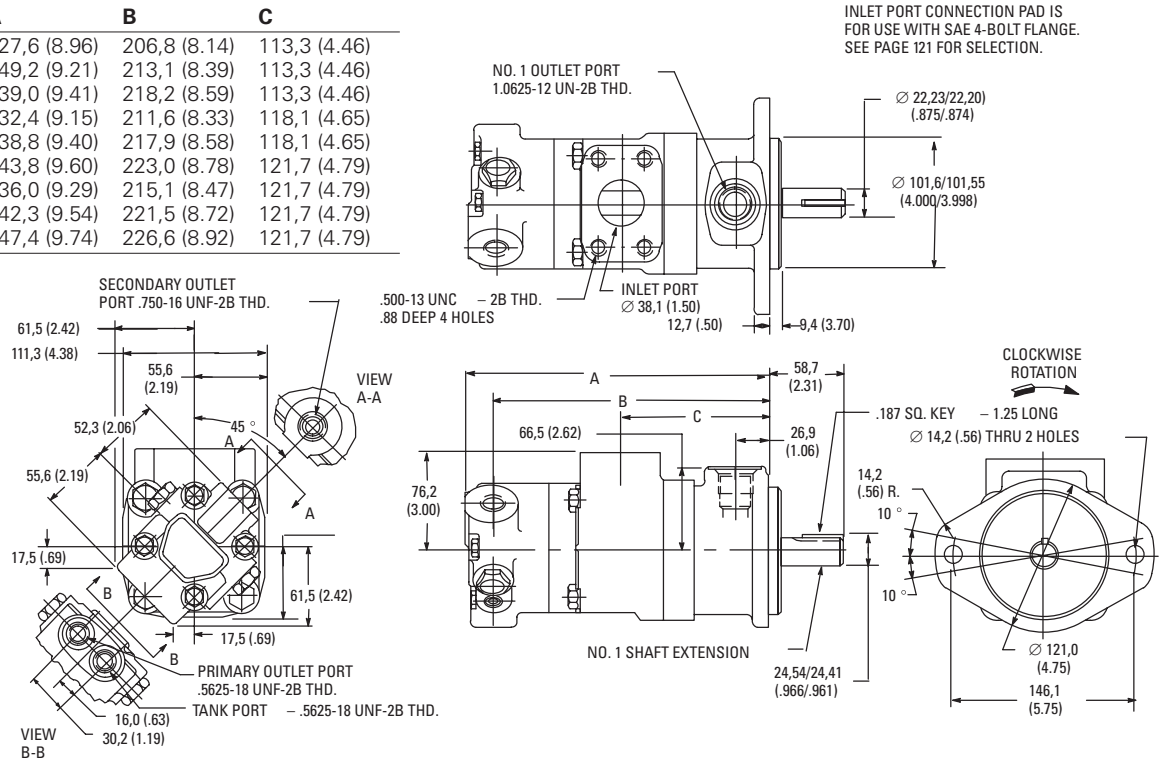

V2020 Series

Dimensions in millimeters (inches).
Shaft options shown on page 85.

Rated Delivery, gpm @ 1200 rpm & 100 psi		Dimensions		
Shaft end	**Cover end**	**A**	**B**	**C**
7,8 or 9	1, 2 or 3	227,6 (8.96)	206,8 (8.14)	113,3 (4.46)
7,8 or 9	4 or 5	249,2 (9.21)	213,1 (8.39)	113,3 (4.46)
7,8 or 9	6 or 7	239,0 (9.41)	218,2 (8.59)	113,3 (4.46)
11	1, 2 or 3	232,4 (9.15)	211,6 (8.33)	118,1 (4.65)
11	4 or 5	238,8 (9.40)	217,9 (8.58)	118,1 (4.65)
11	6 or 7	243,8 (9.60)	223,0 (8.78)	121,7 (4.79)
12 or 13	1, 2 or 3	236,0 (9.29)	215,1 (8.47)	121,7 (4.79)
12 or 13	4 or 5	242,3 (9.54)	221,5 (8.72)	121,7 (4.79)
12 or 13	6 or 7	247,4 (9.74)	226,6 (8.92)	121,7 (4.79)

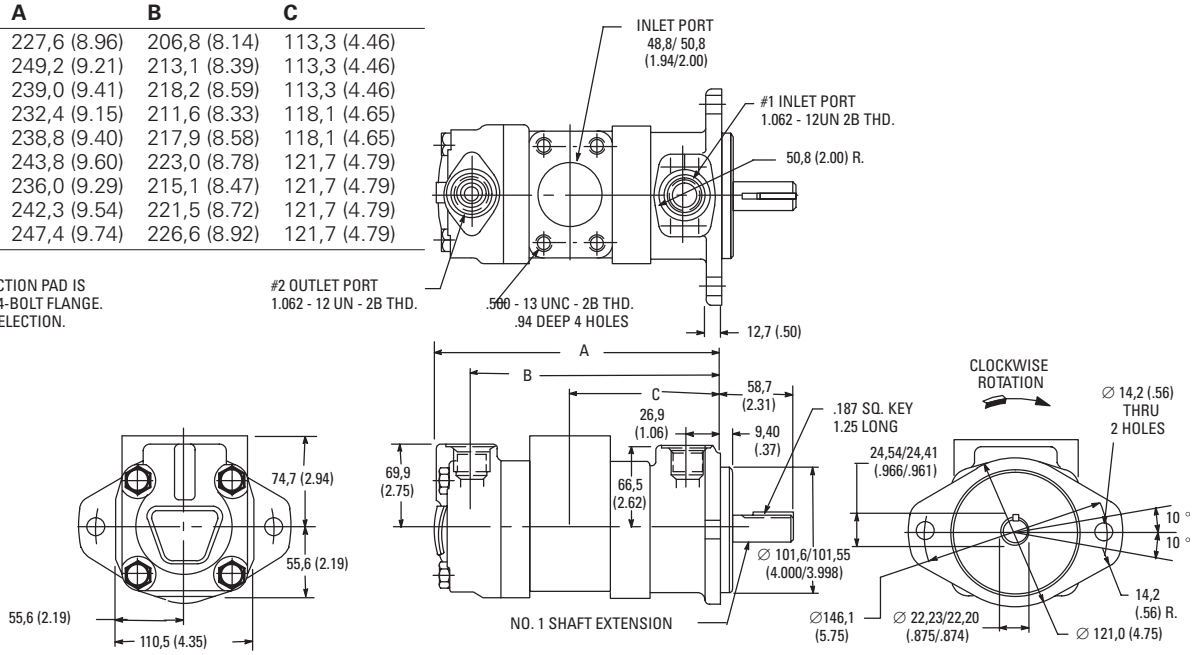

V2020F & V2020P Series

Dimensions in millimeters (inches).

Shaft options shown on page 85.

Rated Delivery, gpm @ 1200 rpm & 100 psi		Dimensions		
Shaft end	**Cover end**	**A**	**B**	**C**
7,8 or 9	6	235,0 (9.25)	211,1 (8.31)	114,0 (4.49)
7,8 or 9	7, 8 or 9	241,3 (9.50)	217,4 (8.56)	114,0 (4.49)
11	6	240,0 (9.45)	216,2 (8.51)	119,1 (4.69)
11	7, 8 or 9	246,4 (9.70)	222,5 (8.76)	119,1 (4.69)
11	11	251,2 (9.89)	227,3 (8.95)	119,1 (4.69)
12 or 13	6	243,6 (9.59)	219,7 (8.65)	122,4 (4.82)
12 or 13	7, 8 or 9	249,7 (9.83)	225,8 (8.89)	122,4 (4.82)
12 or 13	11	254,8 (10.03)	230,9 (9.09)	122,4 (4.82)

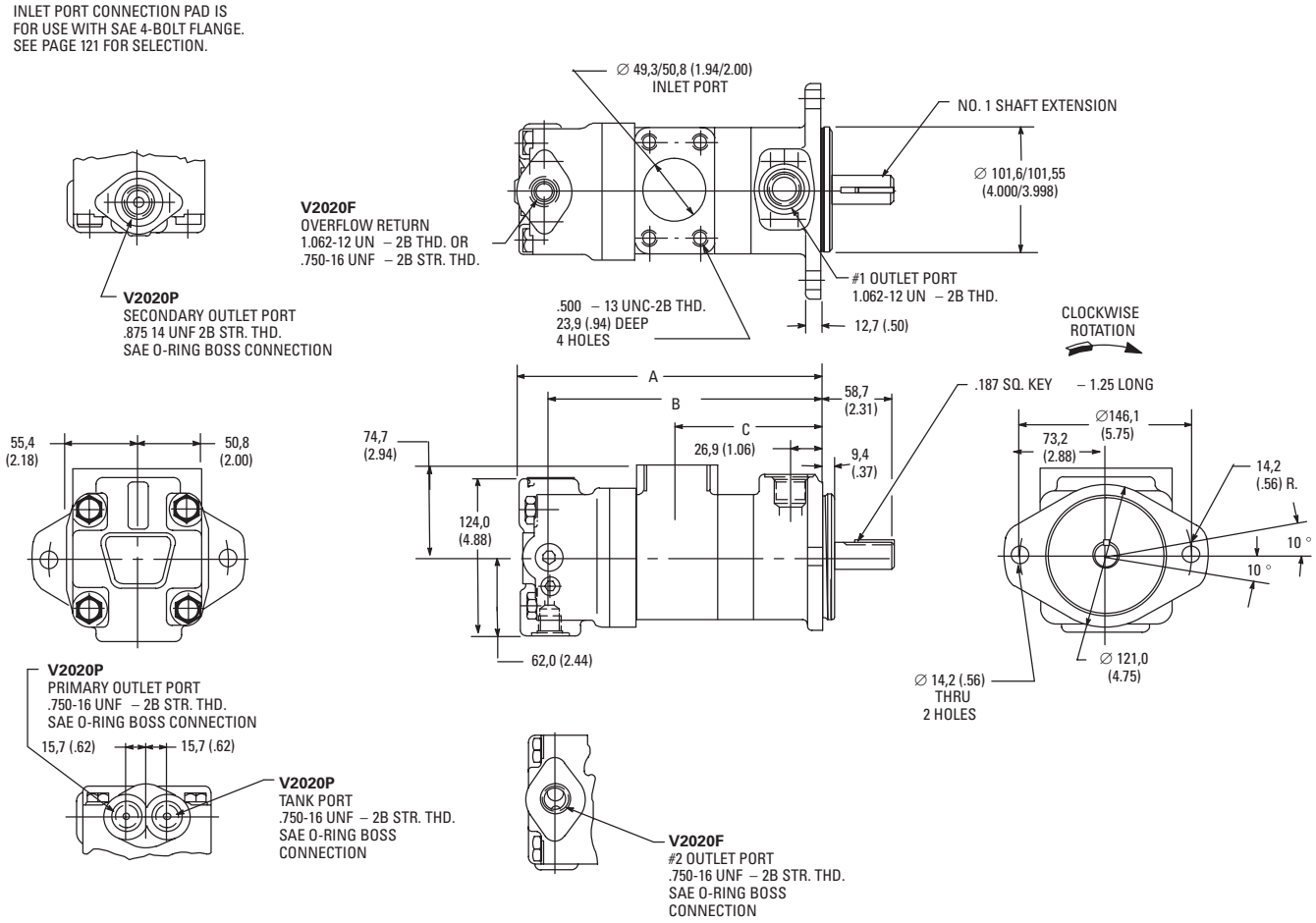

Optional Shafts

V2010 & V2020

Dimensions in millimeters (inches).

Note: No. 1 shaft is shown on pages 82 thru 84.

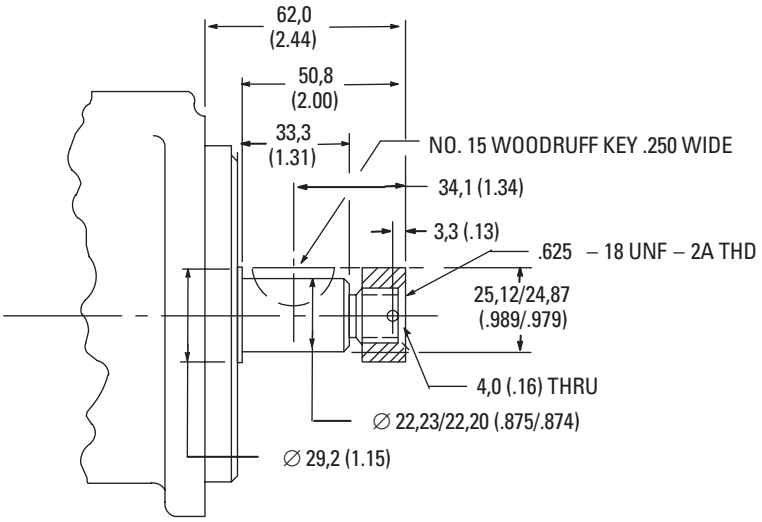

No. 3 shaft extension

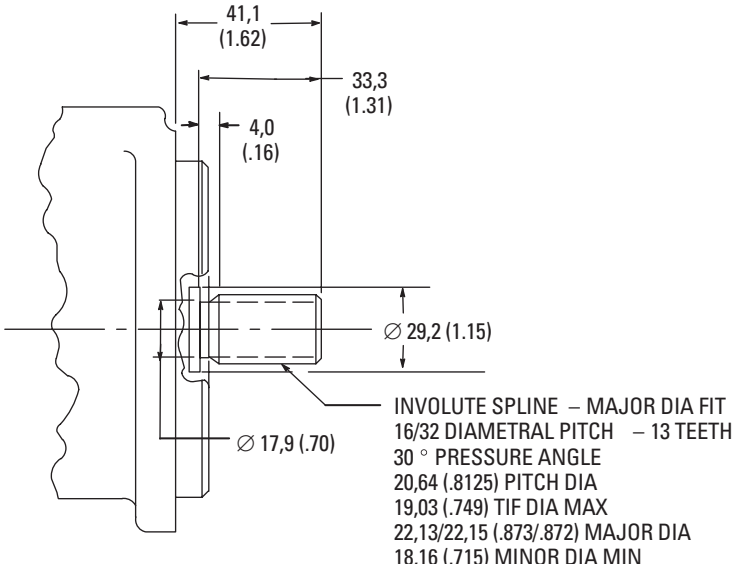

Typical Performance

Shaft-end Pumps
V2010 & V2020 Double Pumps

Performance Constants:
Oil temp. 49° C (120° F), viscosity 32 cSt (150 SSU) @ 38° C (100° F), inlet pressure zero

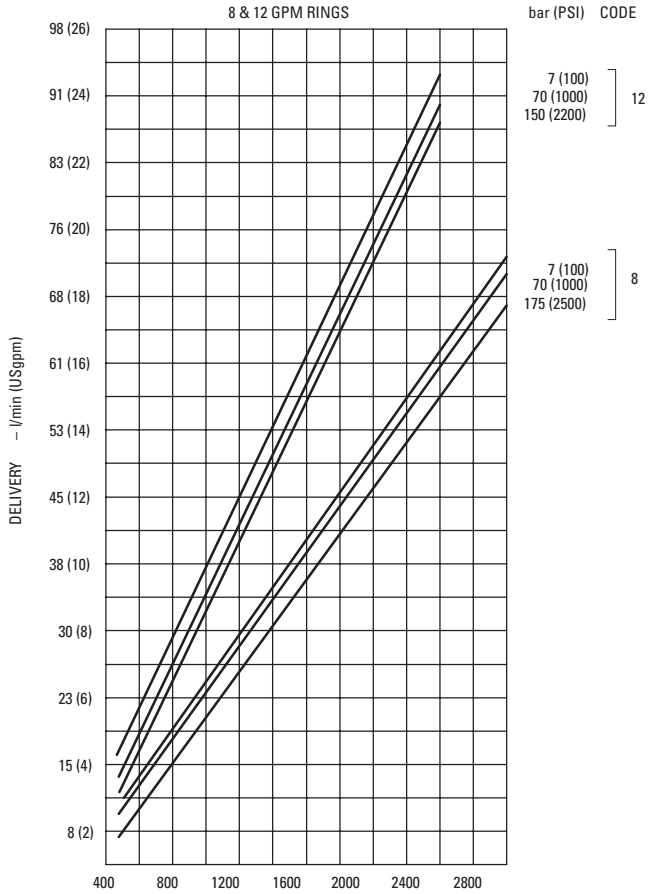

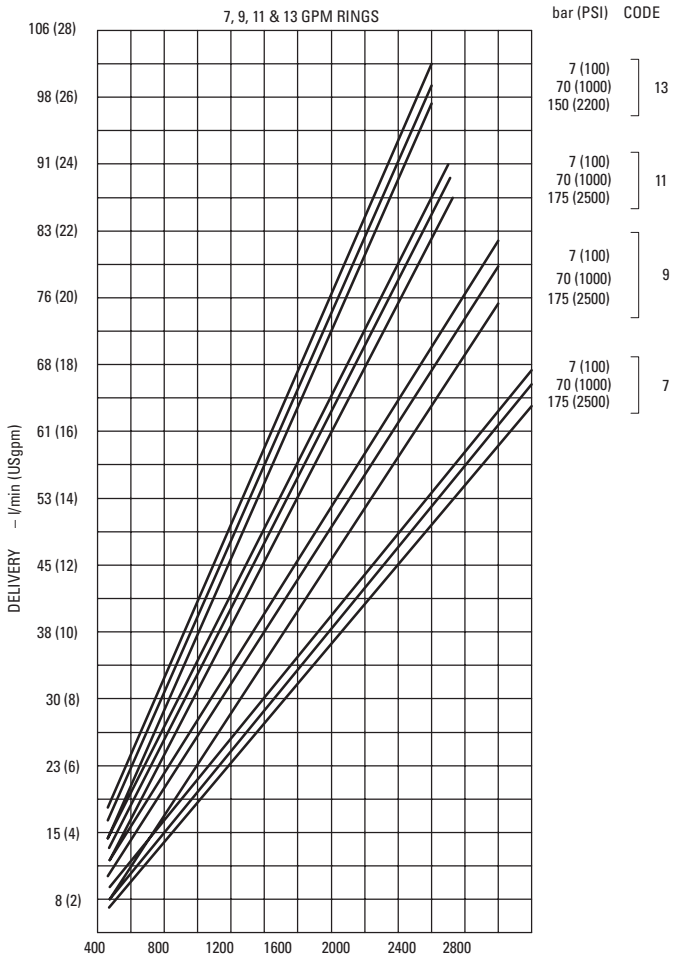

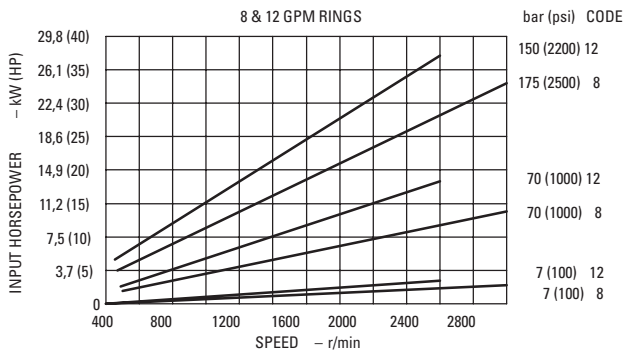

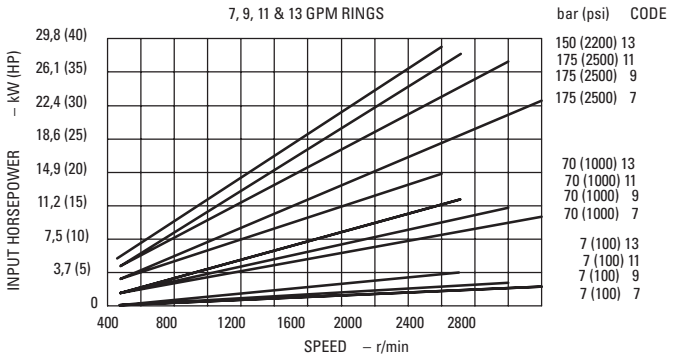

Typical Performance

Cover-end Pumps
V2010 Double Pumps

Performance Constants:
Oil temp. 49° C (120° F), viscosity 32 cSt (150 SSU) @ 38° C (100° F), inlet pressure zero

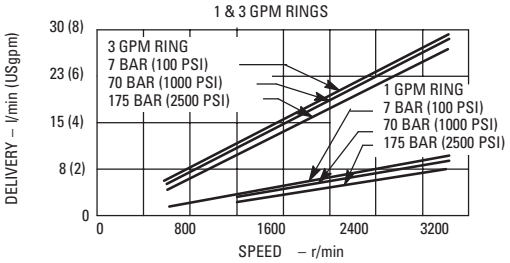

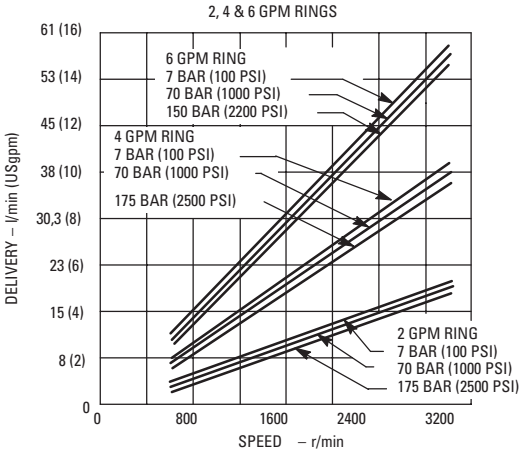

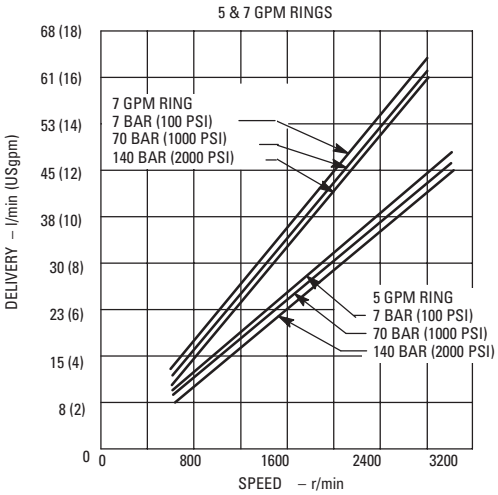

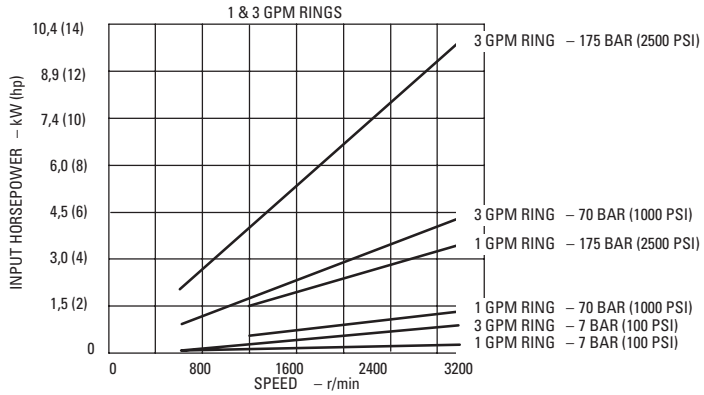

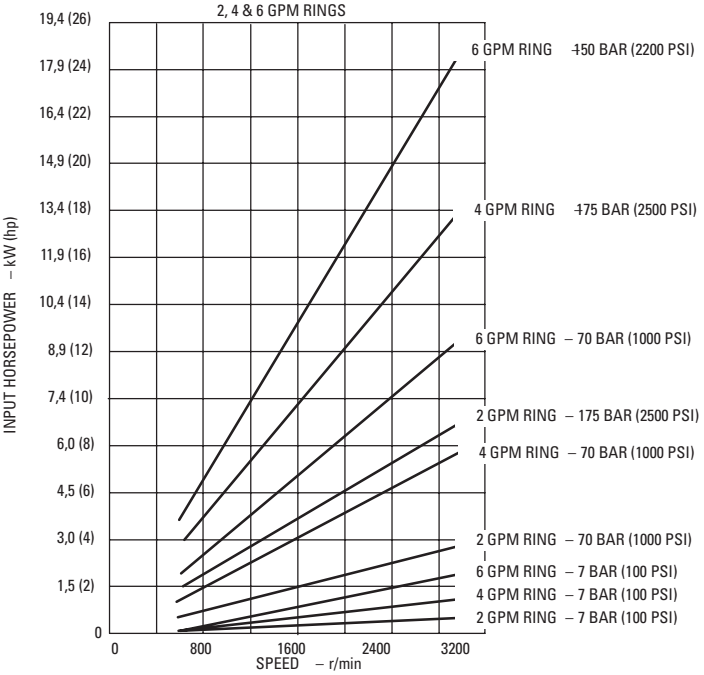

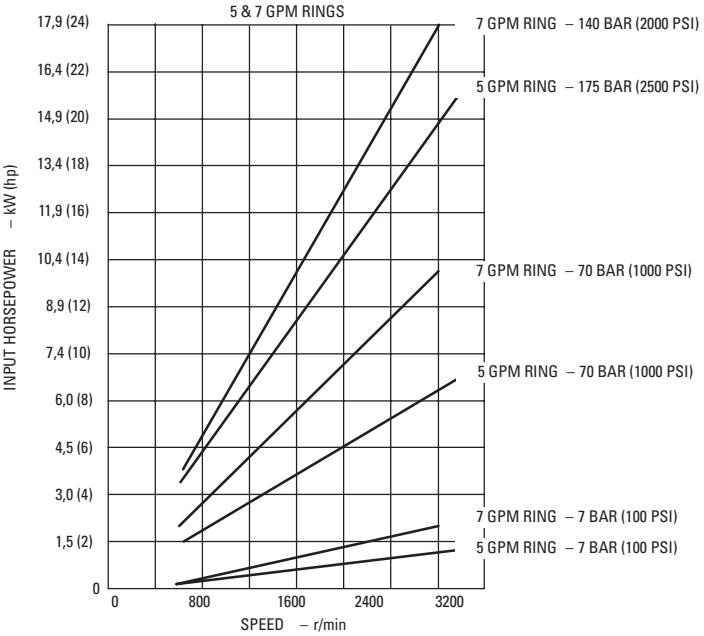

Cover-end Pumps V2020 Double Pumps

Performance Constants:

Oil temp. 49° C (120° F), viscosity 32 cSt (150 SSU) @ 38° C (100° F), inlet pressure zero

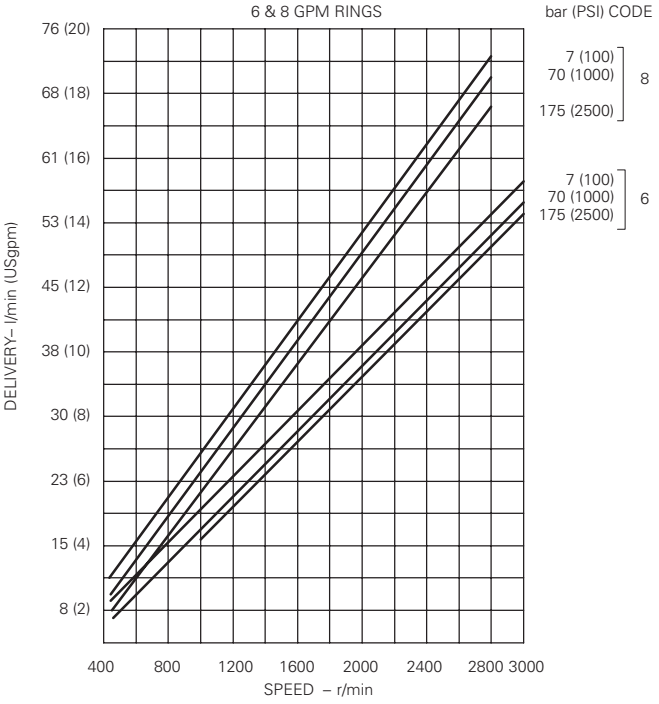

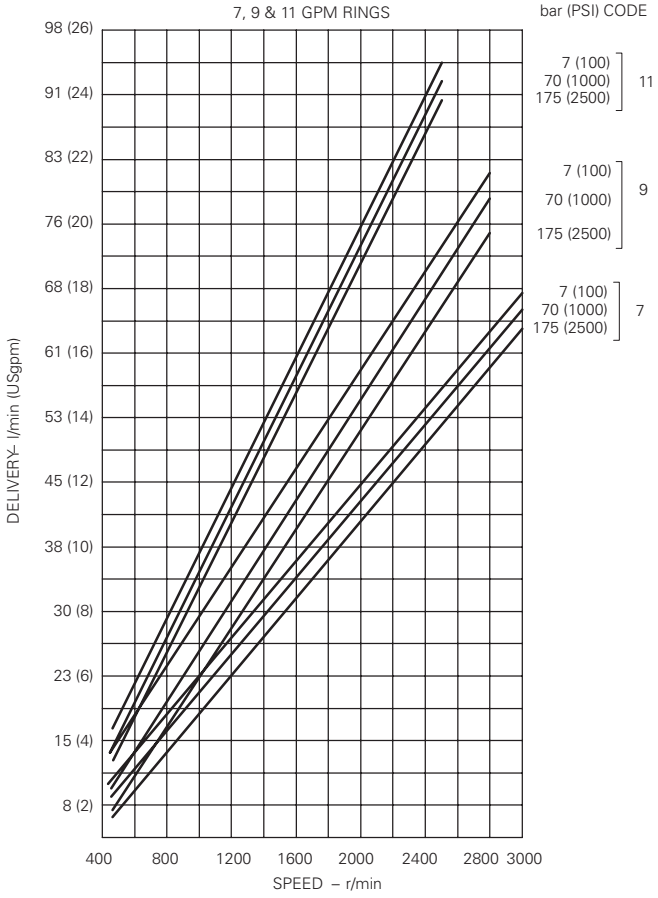

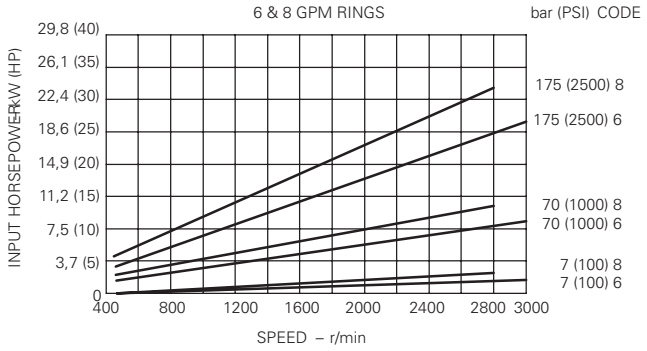

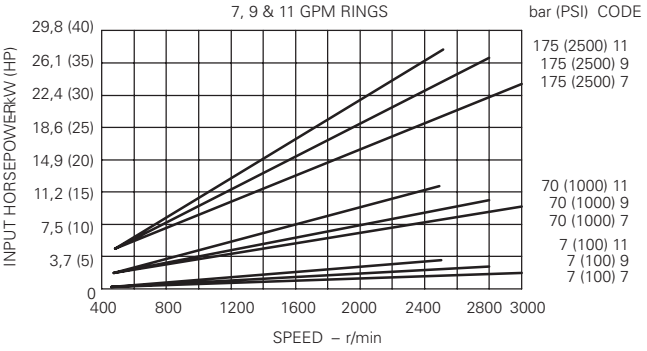

Typical Performance

Priority Valve Models

V2010P Double Pumps

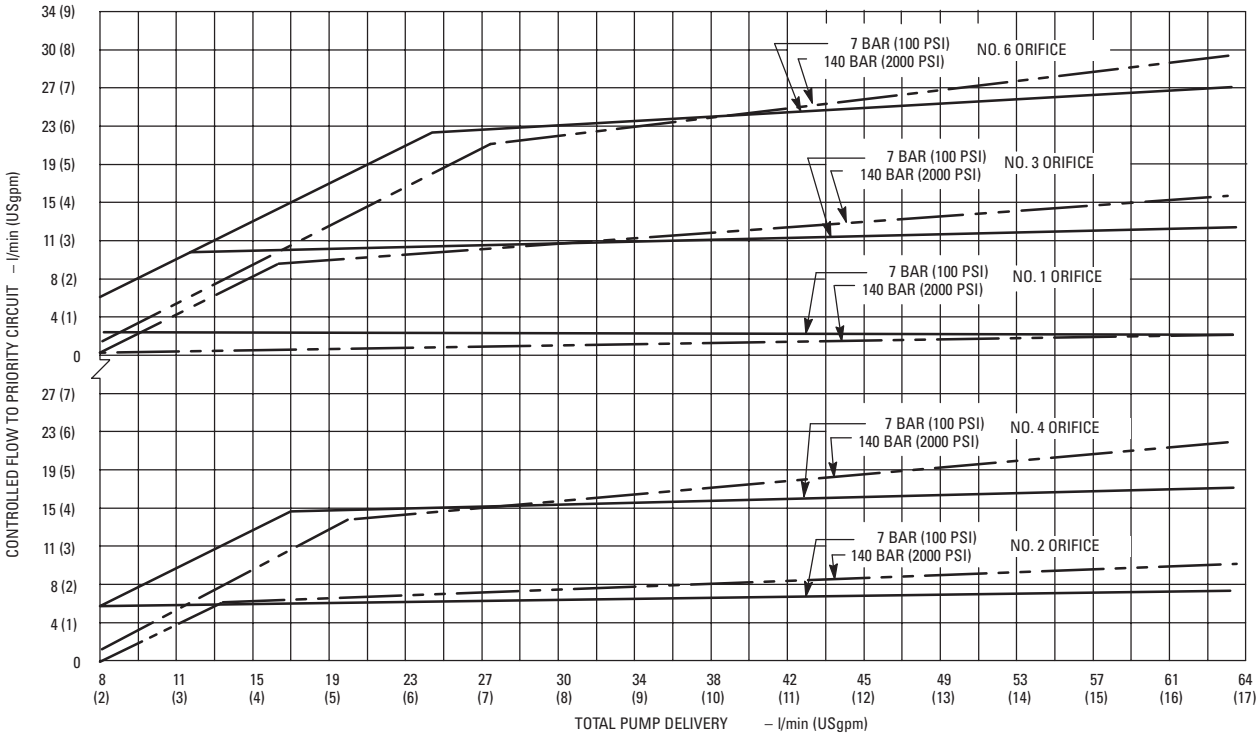

V2020P Double Pumps

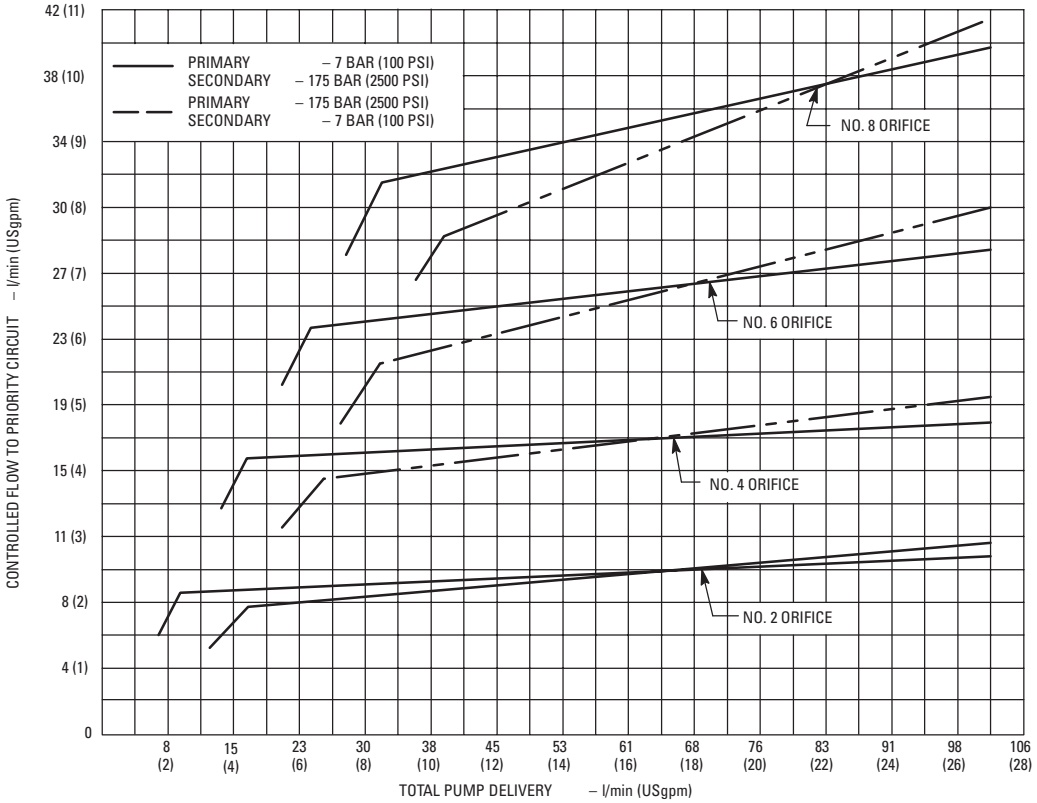

Flow Control Models

V2010F & V2020F Double Pumps

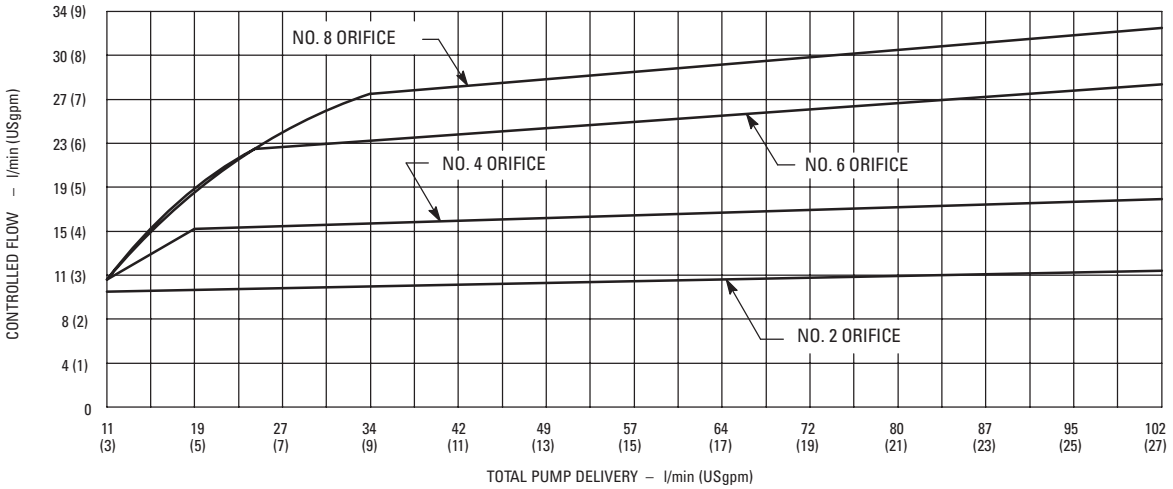

Speed Correction Curve

V2010 & V2020 Double Pumps

Maximum operating speeds shown on performance curves are for pumps operating at 0 psi inlet conditions. To compute maximum operating speeds at other inlet conditions, use appropriate speed rating corrections factors shown on the curve on the right.

Example:

Max. speed @ 0 psi inlet	2700 r/min
Correction factor @ 5 in. Hg	x .93
Max. speed @ 5 in. Hg inlet	2511 r/min
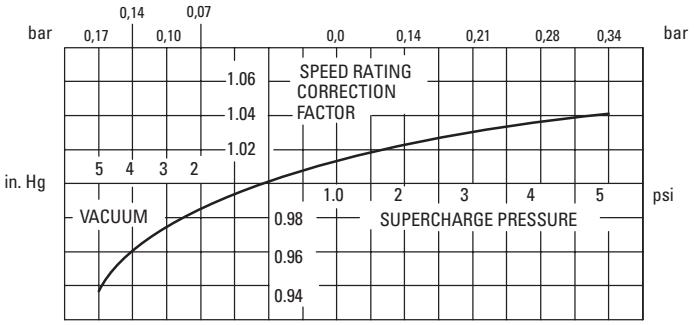
Pump inlet suction should not exceed 5 in. Hg vacuum. Positive pressure on inlet should not exceed 0,7 bar (10 psi)