B

General Description

Series RM relief valves limit system pressure by opening to tank when system pressure reaches the valve setting. With D03 size, they can also be configured to limit the 'A' or 'B' work port pressures independently.

Features

- Parker Manapak RM sandwich style relief valves can be used to limit pressure in the 'P' port, 'A' port, or 'B' port.
- Valve bodies are manufactured from steel which provide extra strength and durability for longer life. Internal hardened steel components also provide longer life.
- Three pressure adjustment options are available: slotted screw, knob and locking knob.

Specifications

	RM2	RM3	RM6
Mounting Pattern	NFPA D03, CETOP 3, NG 6	NFPA D05, CETOP 5, NG 10	NFPA D08, CETOP 8, NG 25
Minimum Pressure	10 Bar (150 PSI) with rated flow, 150 SSU oil, and fluid temperature of 38°C (100°F).[1]		
Maximum Pressure	350 Bar (5000 PSI)	350 Bar (5000 PSI)	350 Bar (5000 PSI)
Minimum Flow	3.78 LPM (1 GPM)	3.78 LPM (1 GPM)	3.78 LPM (1 GPM)
Maximum Flow	53 LPM (14 GPM)	76 LPM (20 GPM)	341 LPM (90 GPM)
Pressure Range	Code / Pressure Range 07 — 10 to 70 Bar (150 - 1000 PSI) 17 — 10 to 175 Bar (150 - 2500 PSI) 25 — 10 to 250 Bar (150 - 3500 PSI) 35 — 10 to 350 Bar (150 - 5000 PSI)		
Venting	Connecting the vent port to tank allows the relief valve to divert flow at minimum pressure.[2]		
Remote Control	Remote control valve connected to the vent port can be used to control the pressure.[3]		

[1] Change in flow, temperature or fluid (SSU) rating will affect valve minimum pressure.
[2] Not available on Model RM2.
[3] Set main valve pressure 10 Bar (150 PSI) higher than remote pilot.

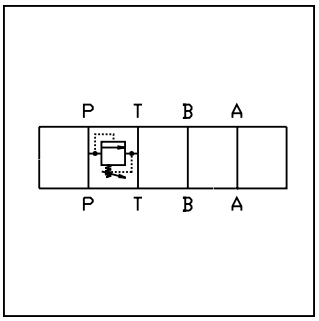

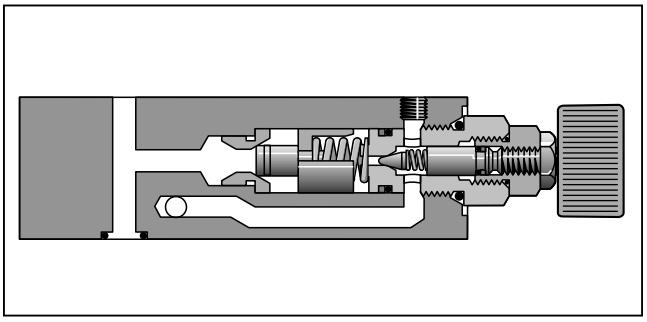

Performance Curves

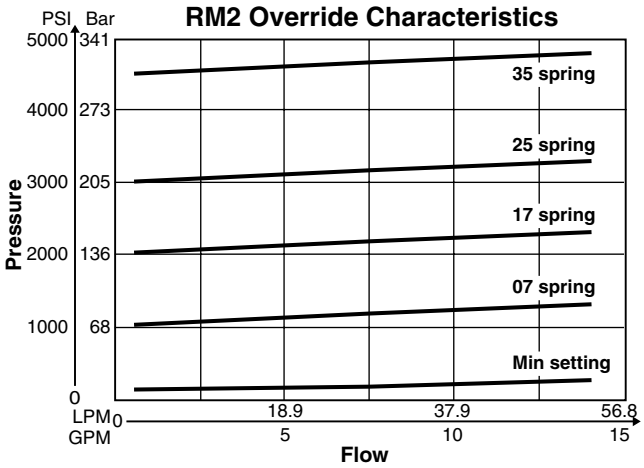

VISCOSITY CORRECTION FACTOR							
Viscosity (SSU)	75	150	200	250	300	350	400
% of ΔP (Approx.)	93	111	119	126	132	137	141

Curves were generated using 100 SSU hydraulic oil. For any other viscosity, pressure drop will change per chart.

RM — Manapak Relief Valve

Size

Code	Description
2	**NFPA D03 Subplate Mounting**
3	**NFPA D05 Subplate Mounting**
6	**NFPA D08 Subplate Mounting**

Valve Option

Code	Description
PT	**Relief P to T**
AT*	Relief A to T
BT*	Relief B to T

* RM2 only.

Pressure Range

Code	Description
07	**10 to 70 Bar (150 to 1000 PSI)**
17	**10 to 175 Bar (150 to 2500 PSI)**
25	**10 to 250 Bar (150 to 3500 PSI**
35	**10 to 350 Bar (150 to 5000 PSI)**

Adjustment

Code	Type
K	**Knob**
L	Locking Knob
S	**Slotted Screw with Jam Nut**

Seal Compound

Code	Type
N	**Nitrile**
V	**Fluorocarbon**

Gage Port

Code	Type
Omit	**SAE**

* Design Series
NOTE: Not required when ordering.

Unit Weight:
RM2 .95 kg (2.1 lbs.)
RM3 3.0 kg (6.6 lbs.)
RM6 5.9 kg (13.0 lbs.)

Bold: Designates Tier I products and options.
Non-Bold: Designates Tier II products and options. These products will have longer lead times.

Manapak Bolt Kits

Size "2"

No. of Manapaks	Manapak & Valve Combination	Bolt Kit	Bolt Length mm (in)
1	Manapak & D1	BK243	73.2 (2.88)
2	Manapak & D1	BK225	111.3 (4.38)
3	Manapak & D1	BK244	152.4 (6.00)
4	Manapak & D1	BK245	190.5 (7.50)

Size "3"

No. of Manapaks	Manapak & Valve Combination	D3W-30 D3DW & D31VW*	Bolt Length mm (in)
1	Manapak & D3	BK141	88.9 (3.50)
2	Manapak & D3	BK142	139.7 (5.50)
3	Manapak & D3	BK143	190.5 (7.50)

* D31VW with internal pilot and internal drain only.

Size "6"

No. of Manapaks	Manapak & Valve Combination	Bolt Kit	Bolt Length mm (in)
1	Manapak & D6	BK121	133.4 (5.25)
2	Manapak & D6	BK122	203.2 (8.00)
3	Manapak & D6	BK123	273.1 (10.75)
4	Manapak & D6	BK124	342.9 (13.5)

Bolt Kits must be ordered separately.

Schematics

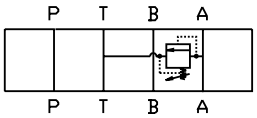

AT Option

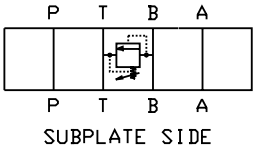

BT Option

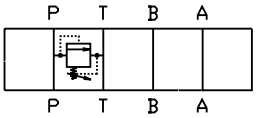

PT Option

B

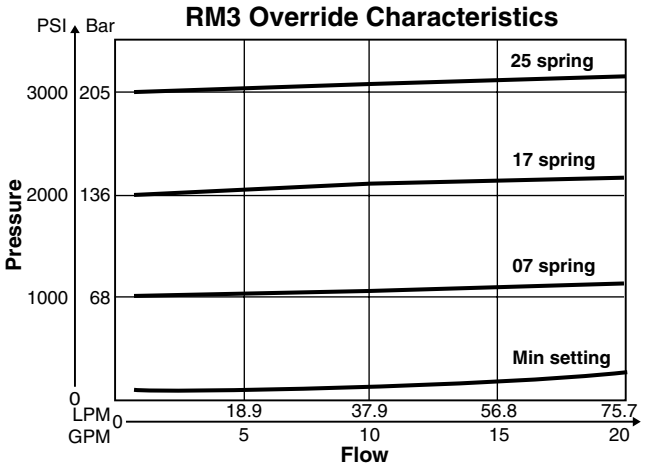

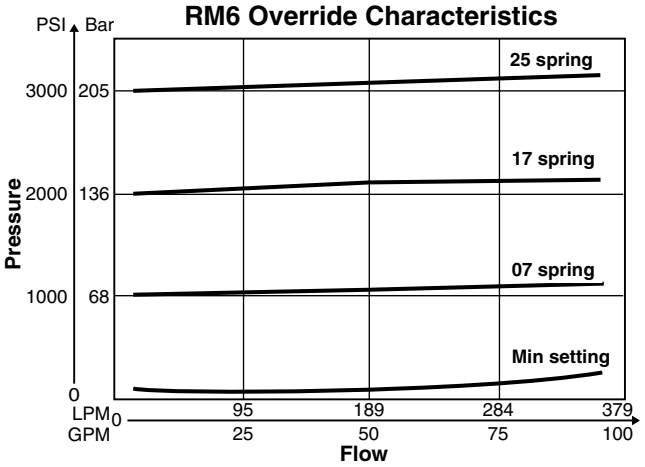

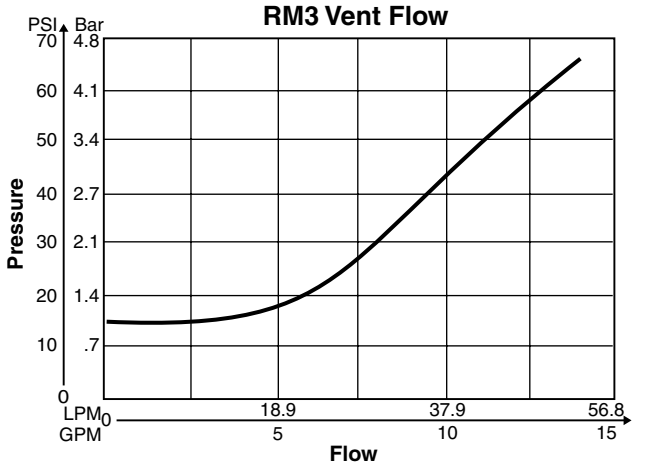

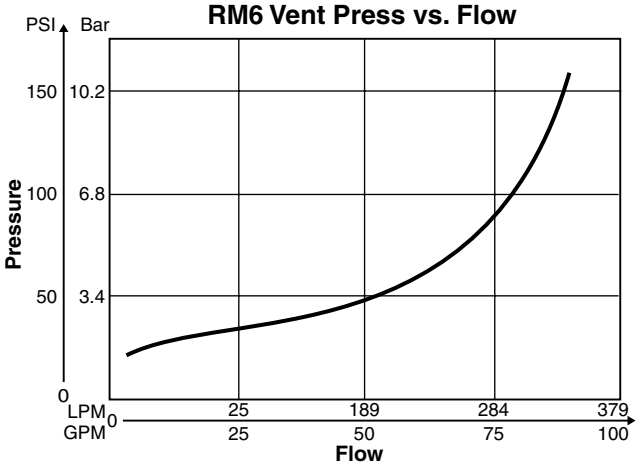

VISCOSITY CORRECTION FACTOR							
Viscosity (SSU)	75	150	200	250	300	350	400
% of ΔP (Approx.)	93	111	119	126	132	137	141
Curves were generated using 100 SSU hydraulic oil. For any other viscosity, pressure drop will change per chart.							

2502-B1.p65, dd

Parker Hannifin Corporation
Hydraulic Valve Division
Elyria, Ohio, USA

B

Inch equivalents for millimeter dimensions are shown in (**)

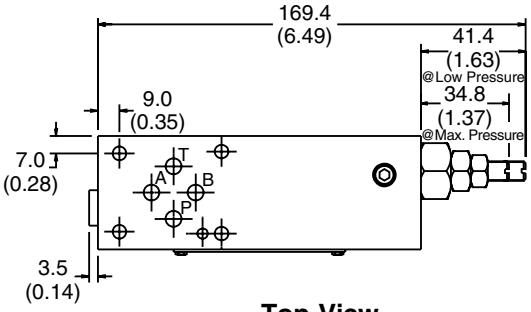

Top View

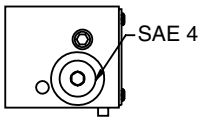

PT Body Shown
Gage Port Location
Varies from AT Body
and BT Body

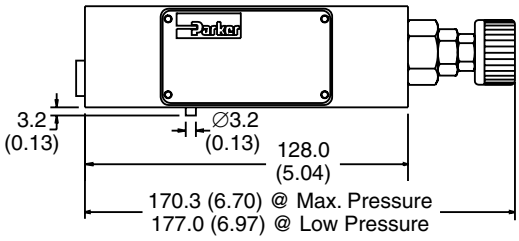

Face View

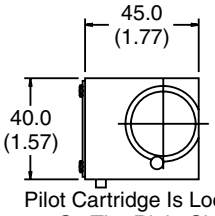

Pilot Cartridge Is Located
On The Right Side
For PT Body And BT Body

End View

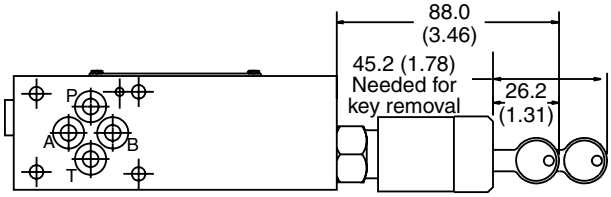

Bottom View

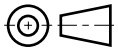

2502-B1.p65, dd

Parker Hannifin Corporation
Hydraulic Valve Division
Elyria, Ohio, USA

B

Inch equivalents for millimeter dimensions are shown in (**)

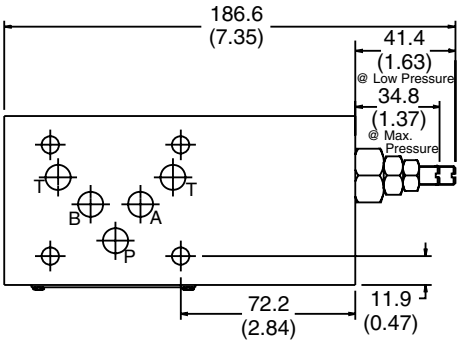

Top View

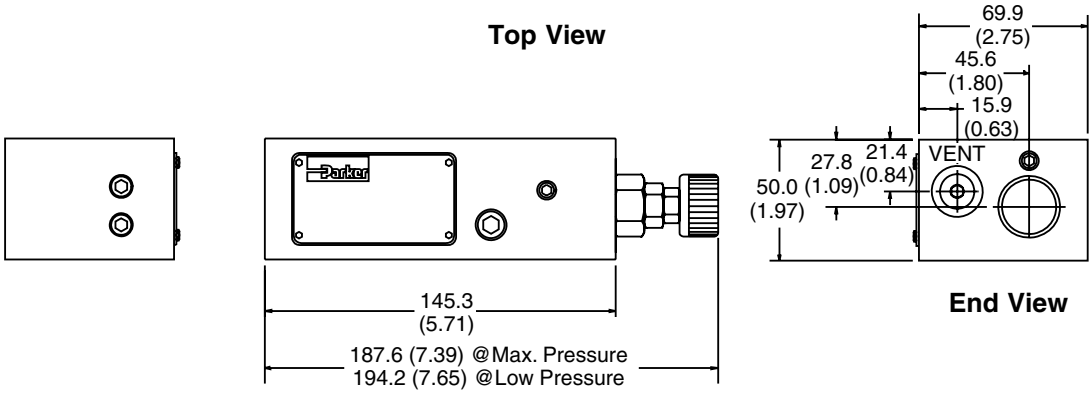

End View

Face View

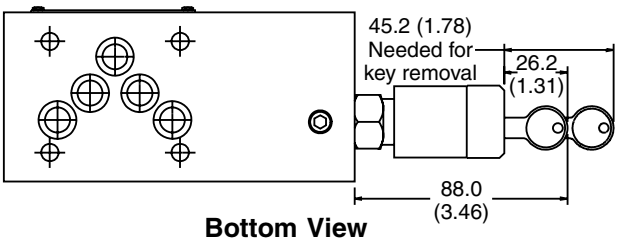

Bottom View

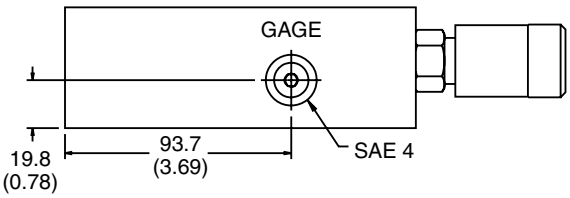

Back View

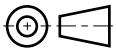

2502-B1.p65, dd

Parker Hannifin Corporation
Hydraulic Valve Division
Elyria, Ohio, USA

B

Inch equivalents for millimeter dimensions are shown in (**)

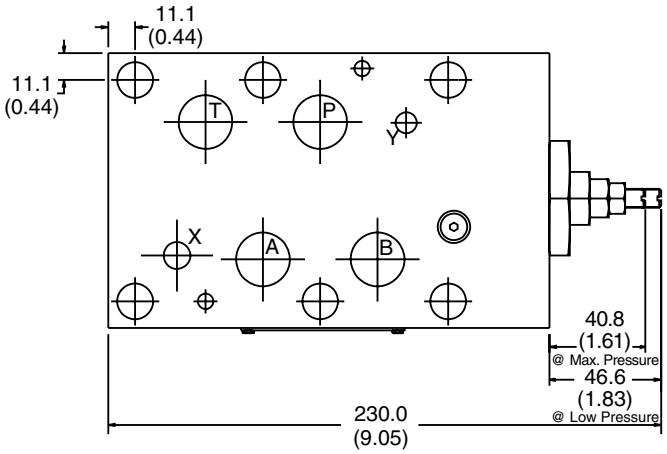

Top View

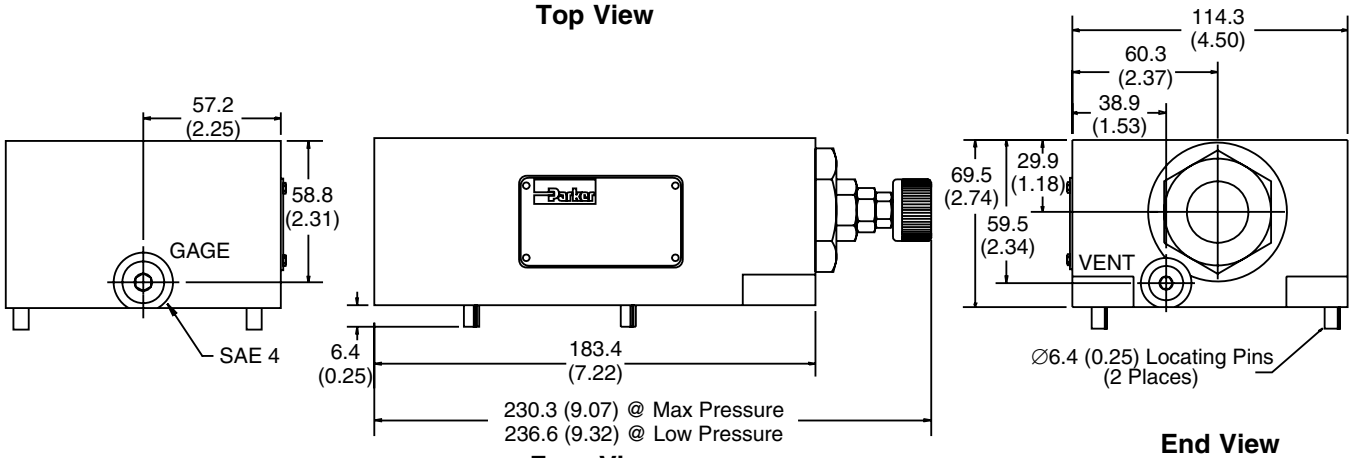

Face View

End View

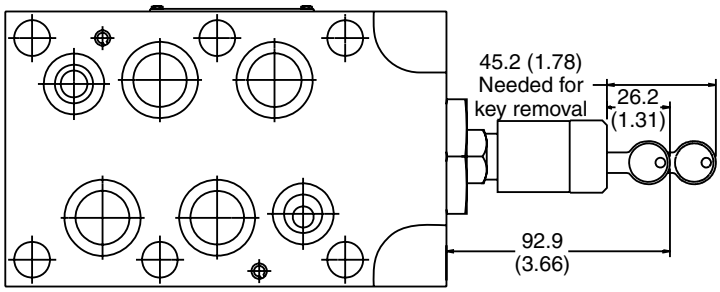

Bottom View

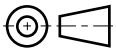

2502-B1.p65, dd

Parker Hannifin Corporation
Hydraulic Valve Division
Elyria, Ohio, USA

B

CAUTION:
Manapak Installation

Prior to installation of Manapaks, please review flow paths. Due to the reversibility of the DO3 size, incorrect installation will alter the hydraulic circuit. Care must be taken during installation to insure that the Manapak is installed in compliance with the hydraulic schematic. Please consult with your Parker representative with any questions that may arise.

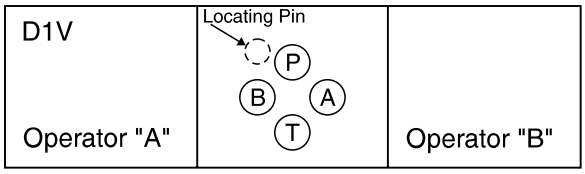

Pressure Ratings

Unless otherwise specified, all Parker Manapaks have continuous duty pressure rating as shown in this catalog.

Special Requirements

Consult your Parker representative for factory recommendations on such situations as:

- Installations that will operate at pressures higher than published catalog ratings.
- Use of hydraulic fluids which do not meet our recommended specifications.
- Operations where fluid temperature will exceed 121°C (250°F).

Recommended Mounting Surface

Surface must be flat within .0004 inch T.I.R. and smooth with 32 micro-inch.

System Cleanliness

Any hydraulic system that includes Parker valves should be carefully protected against dirt and fluid contamination. Life of the valves, as well as of all other components, will be greatly lengthened. Operation will be smoother and more precise. Maintenance and repairs will be reduced. Lost production because of low pressure and flow will be minimized. Fluid contamination should be maintained to less than 500 particles larger than 10 micrometers per milliliter of fluid (SAE class 4 or better/ISO Code 16/13).

Hydraulic Fluids

Parker recommends using top-quality hydraulic fluids having a viscosity range of 32 to 54 cSt (150 to 250 SSU) at 38°C (100°F). The absolute viscosity range should be 16 to 220 cSt (80 to 1000 SSU). Fluids should have highest anti-wear characteristics and be treated to avoid rust and oxidation.

Seals

When used with water-glycol, water/oil emulsions, and high-grade petroleum base hydraulic fluids, Parker standard nitrile seals are suitable.

When using phosphate ester fluids or their blends, specify Parker optional seals made of fluorocarbon. Synthetic fire-resistant fluids require special seal materials which your Parker representative can recommend.

Torque Specifications

The recommended torque valves are for the bolts which mount the valve to the manifold or subplate are as follows:

Size	Torque Valve
2	5.7 N.m. (50 in.-lbs.)
3	16.3 N.m. (12 ft.-lbs.)
6	108.5 N.m. (80 ft.-lbs.)

B

Mounting Patterns

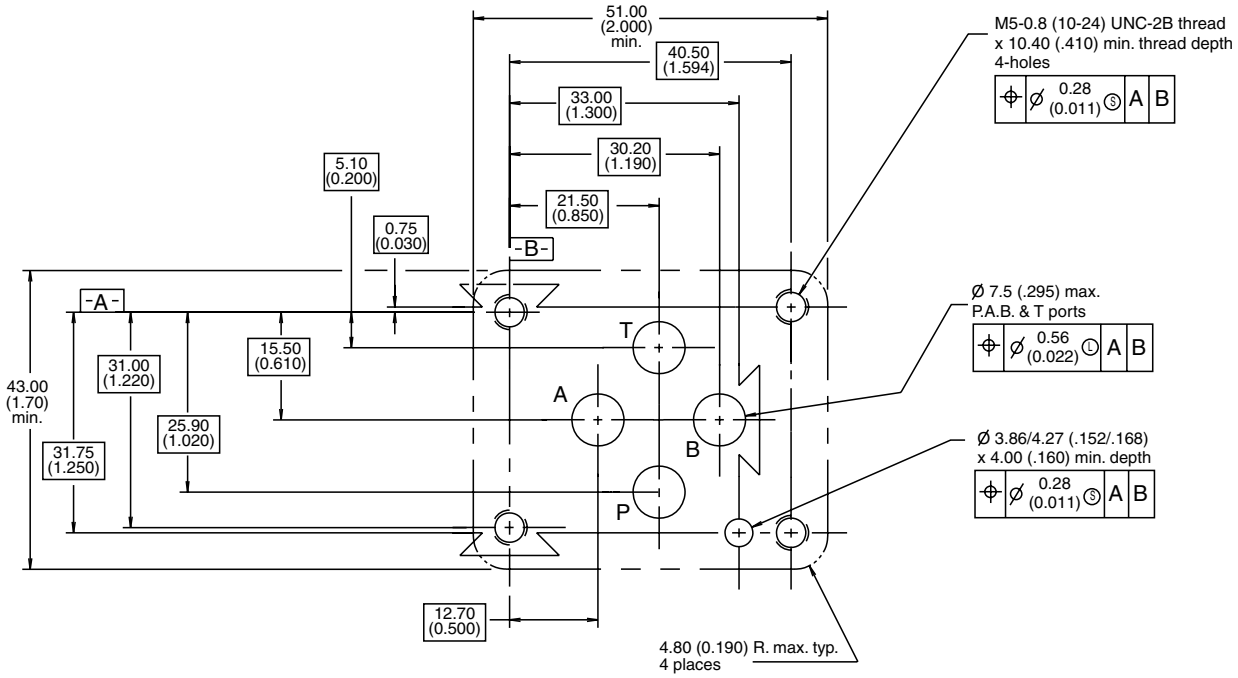

Mounting Surface for Directional Control Valve Manifold M'TD. (NFPA, D03); CETOP 3 & NG 6

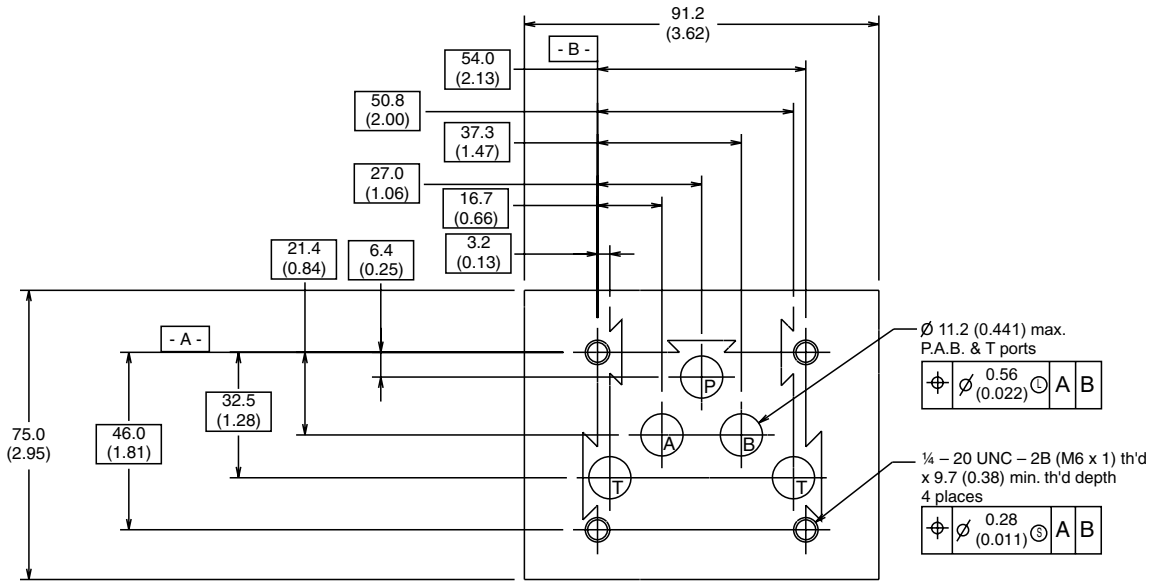

Mounting Surface for Directional Control Valve (NFPA, D05); CETOP 5 & NG 10

B

Mounting Patterns

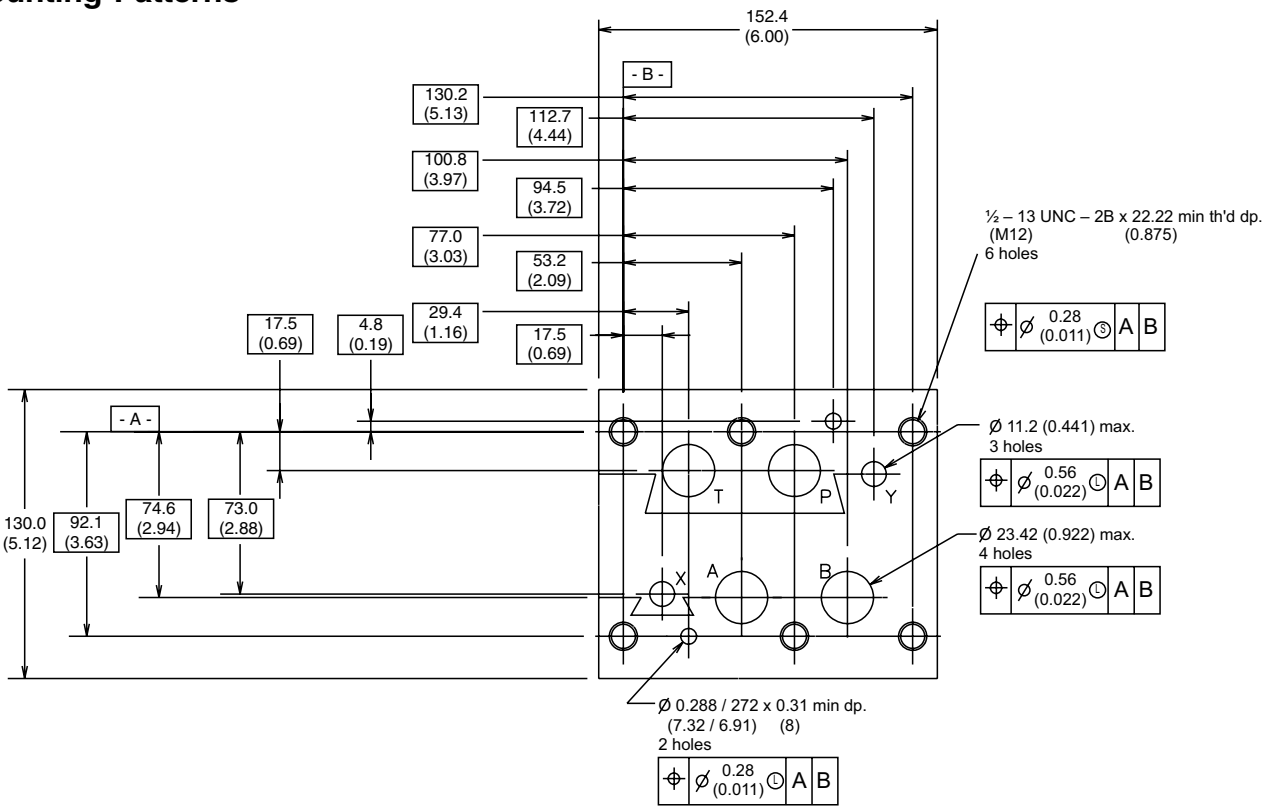

Mounting Surface for Directional Control Valve (NFPA, D08); CETOP 8 & NG 25

Subplates and Manifolds

Series D1V
General Description C2
Features C2
Operation C2
Dimensions
Side Ported Subplate – NFPA D03 ..... C2
Bottom Ported Subplate – NFPA D03 ..... C3
Manifold – NFPA D03 ..... C4
Ordering Information
Subplates C5
Manifolds C6

Series D3A, D3DW, D3L and D3W
Features C7
Dimensions
Side Ported Subplate – NFPA D05 ..... C7
Bottom Ported Subplate – NFPA D05 ..... C7
Manifold – NFPA D05 ..... C8

Series D31, D3P and High Flow
Features C9
Dimensions
Side Ported Subplate – NFPA D05H (E) C9
Bottom Ported Subplate – NFPA D05H (E) C9
Manifold – NFPA D05H (E) C10
Ordering Information
D3 Subplates C11
D3 Manifolds C12
D3P and High Flow Manifolds C13

Series D6 and D8
Features C14
Dimensions
Side Ported Subplate – NFPA D08 ..... C14
Bottom Ported Subplate – NFPA D08 ..... C15
Manifold – NFPA D08 ..... C16
Ordering Information
Subplates C17
Manifolds C18

Accessories
Dimensions
Cover and Crossover Plates – NFPA D03, D05, D05H and D08 ..... C19 - C22
Tapping Plates – NFPA D03, D05, D05H and D08 ..... C23 - C26
Ordering Information
Tapping and Cover Plates – D1V, D3, D31, D6 and D8 ..... C27 - C30

Installation Information
Mounting Patterns – NFPA D03, D05, D05H and D08 ..... C31 - C33

C

Parker Hannifin Corporation
Hydraulic Valve Division
Elyria, Ohio, USA