Triple Pump Operating Specifications

Maximum speed ratings for triple pumps are dependent upon V10 ring size. See chart below for ratings.

Pressure ratings are shown on page 25 for VQ sections and page 69 for V10 sections.

Cover-end pump (V10) delivery/USgpm @ 1200 rpm and 100 psi	Maximum Speed - r/min				
	2520VQSV10	**3520VQSV10**	**3525VQSV10**	**4525VQSV10**	**4535VQSV10**
1	2700	2500	2500	2200	2200
2	2700	2500	2500	2200	2200
3	2700	2500	2500	2200	2200
4	2700	2500	2200* 2500+	2200	2200
5	2700	2500	2200* 2500+	2200	2200
6	2200* 2500+	2200* 2500+	2200* 2400+	2200	2200
7	1900* 2200+	1900* 2200+	2200	2000* 2200+	2100* 2200+

* With V10 pressure over 70 bar (1000 psi)

+ With V10 pressure to 70 bar (1000 psi)

Typical Performance

For triple pump performance, use curves listed in this table:

Triple pump model series	Shaft end pump	Center pump	Cover end pump	Page no.
2520VQSV10	25**VQ			34
		**20VQ		37
			V10	75, 78, 79
3520VQSV10	35**VQ			35
		**20VQ		38
			V10	75, 78, 79
3525VQSV10	35**VQ			35
		**25VQ		39
			V10	75, 78, 79
4525VQSV10	45**VQ			36
		**25VQ		41
			V10	75, 78, 79
4535VQSV10	45**VQ			36
		**35VQ		42
			V10	75, 78, 79

Model Codes

Triple Pump

(F3) - 2520VQ S V10 F - 17 A 8 T 3 - S 297 B C A 3 D - 20 R

1 2 3 4 5 6 7 8 9 10 11 12 13 14 15 16 17 18 19

1 F3 - Viton seals
Omit if not required.

2 Double pump series
First two numerals in the series denote shaft end of triple pump; second two numerals denote the center pump.

2520VQ	4525VQ
3520VQ	4535VQ
3525VQ	

3 SAE mounting
S – SAE mounting per J 744

4 Single pump series
Cover end pump of triple pump

5 Cover options for V10 pump
S – Standard cover
F – Integral flow control & relief valve
P – Integral priority valve & relief

6 SAE rated flow, shaft-end pump
Refer to table 1.

7 Double pump port connections
A – All SAE 4-bolt flange
AM – Metric 4-bolt flange

8 SAE rated flow, center pump
Refer to table 1.

9 No. 3 outlet port connection
Standard Cover
S – .750-16 straight thread
Flow Control Cover
T – .750-16 straight thread, control port & tank port.
Priority Valve Cover
K – .5625-18 straight thread, primary port & tank port.
.750-16 straight thread, secondary port

10 SAE rated flow, cover end pump
Refer to table 1.

11 Shaft seal
S – Double seal
Blank – Single seal

12 Splined shaft
297 – All series

13 No. 1 outlet port position
Refer to table 2.

14 No. 2 outlet port position
Refer to table 2.

15 No. 3 outlet port position
Refer to table 2.

16 Controlled flow rate, V10F & V10P
Omit for standard cover.
3 – 11 L/min (3 USgpm)
4 – 15 L/min (4 USgpm)
5 – 19 L/min (5 USgpm)
6 – 23 L/min (6 USgpm)
7 – 27 L/min (7 USgpm)
8 – 30 L/min (8 USgpm)

17 Relief valve setting, V10F & V10P
Omit for standard cover.

A – 17 bar (250 psi)	**F** – 100 bar (1500 psi)
B – 35 bar (500 psi)	**G** – 121 bar (1750 psi)
C – 52 bar (750 psi)	**H** – 140 bar (2000 psi)
D – 70 bar (1000 psi)	**J** – 155 bar (2250 psi)
E – 86 bar (1250 psi)	**K** – 175 bar (2500 psi)

18 Design
Subject to change. Installation dimensions remain the same for designs -20 through -29.

19 Shaft rotation
(Viewed from shaft end of pump)
L – Left hand (counterclockwise)
R – Right hand

Table 1

Rated Flow @ 1200 r/min & 100 psi – USgpm

Shaft–end pump 2520	Shaft–end pump 35**	Shaft–end pump 45**	Center pump **20	Center pump **25	Center pump **35	Cover–end pump V10
12	25	42	5	12	25	1
14	30	50	8	14	30	2
17	35	60	11	17	35	3
21	38		12	21	38	4
			14			5
						6
						7

Table 2

Outlet position code

Position viewed from cover end	13 No. 1 outlet	14 No. 2 outlet	15 No. 3 outlet
Opposite inlet	A	A (4535 only)	A
135° CCW from inlet	–	A	–
90° CCW from inlet	B	B (4535 only)	B
45° CCW from inlet	–	B	–
Inline with inlet	C	C (4535 only)	C
45° CW from inlet	–	C	–
90° CW from inlet	D	D (4535 only)	D
135° CW from inlet	–	D	–

Installation Dimensions

Triple Pumps

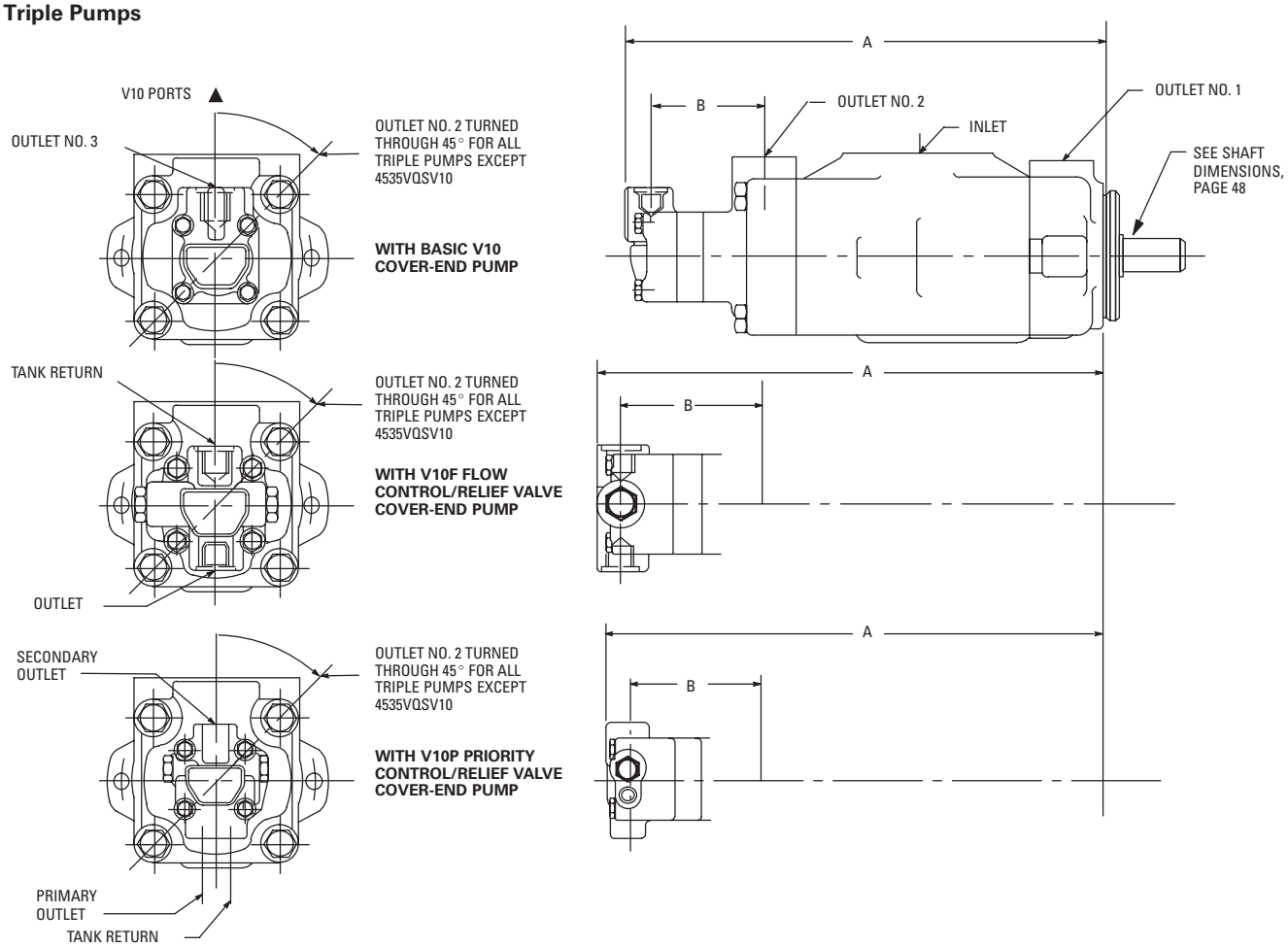

V10 cover can be assembled in any of four positions; see model codes, page 46. 4535VQSV10 shown.

Model series	Dimensions mm (in.)					
	1, 2 & 3 USgpm*		4 & 5 USgpm*		6 & 7 USgpm*	
	A	B	A	B	A	B
2520VQSV10	350 (13.78)	87 (3.43)	356 (14.03)	94 (3.68)	361 (14.23)	99 (3.88)
2520VQSV10F	363 (14.30)	105 (4.12)	370 (14.55)	111 (4.38)	375 (14.75)	116 (4.58)
2520VQSV10P	364 (14.35)	105 (4.12)	371 (14.60)	111 (4.38)	376 (14.80)	116 (4.58)
3520VQSV10	372 (14.66)	87 (3.43)	379 (14.91)	94 (3.68)	384 (15.11)	99 (3.88)
3520VQSV10F	386 (15.18)	105 (4.12)	392 (15.43)	111 (4.37)	397 (15.63)	116 (4.57)
3520VQSV10P	387 (15.23)	105 (4.12)	393 (15.48)	111 (4.37)	398 (15.68)	116 (4.57)
3525VQSV10	381 (15.00)	86 (3.40)	387 (15.25)	93 (3.65)	392 (15.45)	98 (3.85)
3525VQSV10F	394 (15.52)	104 (4.09)	401 (15.77)	110 (4.34)	406 (15.97)	115 (4.54)
3525VQSV10P	395 (15.57)	104 (4.09)	402 (15.82)	110 (4.34)	407 (16.02)	115 (4.54)
4525VQSV10	420 (16.53)	86 (3.40)	426 (16.78)	93 (3.65)	431 (16.98)	98 (3.85)
4525VQSV10F	433 (17.05)	104 (4.09)	439 (17.30)	110 (4.34)	445 (17.50)	115 (4.54)
4525VQSV10P	434 (17.10)	104 (4.09)	441 (17.35)	110 (4.34)	446 (17.55)	115 (4.54)
4535VQSV10	445 (17.50)	84 (3.31)	451 (17.75)	90 (3.56)	456 (17.95)	96 (3.76)
4535VQSV10F	458 (18.02)	102 (4.00)	464(18.27)	108 (4.25)	469 (18.47)	113 (4.45)
4535VQSV10P	459 (18.07)	102 (4.00)	465 (18.32)	108 (4.25)	470 (18.52)	113 (4.45)

* SAE rated flows (@1200 rpm and 100 psi) of V10, V10F & V10P cover-end pump (see page 69).

For detailed dimensions of double pump end, see pages 28 through 30; for V10 series cover-end pump, see pages 71 and 72.

Shaft – Triple Pumps

Dimensions – No. 297 shaft
Dimensions in millimeters (inches)

Model	A	B	C
2520VQSV10	41,1 (1.62)	7,9 (.31)	27,7 (1.09)
352*VQSV10	55,4 (2.18)	7,9 (.31)	35,1 (1.38)
45**VQSV10	55,4 (2.18)	7,9 (.31)	40,4 (1.59)

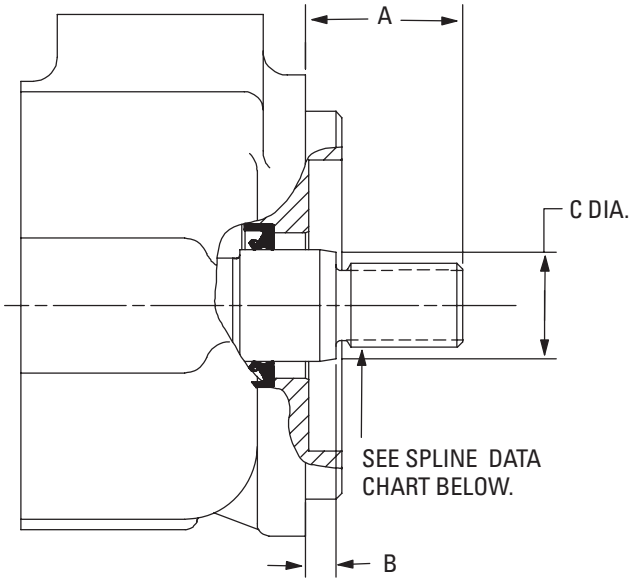

Spline data – No. 297 shaft
Dimensions in millimeters (inches)

Model	No. of teeth	Pitch	Major dia.	Form dia.	Minor dia.	Fit
2520VQSV10	13	16/32	21,8 (.858) 21,6 (.852)	19,0 (.749)	18,16 (.715)	
352*VQSV10	14	12/24	31,2 (1.229) 31,1 (1.223)	27,4 (1.08)	26,4 (1.040)	Side fit
45**VQSV10	14	12/24	31,2 (1.229) 31,1 (1.223)	27,4 (1.08)	26,4 (1.040)	

Shaft torque ratings – No. 297 shaft

Pump series	Drive shaft	Max. torque capability Nm (lb-in)
	Designation	
2520VQSV10	"B" per SAE J744C. 22-4 per SAE J744 Oct '83	344 (3040)
352*VQSV10	"C" per SAE J744C. 32-4 per SAE J744 Oct '83	791 (7000)
45**VQSV10	"C" per SAE J744C. 32-4 per SAE J744 Oct '83	1017 (9000)