ISO4401 size 05, ANSI/B93.7M-D05
DG3V-5 10 & DG5V-5 10 Design

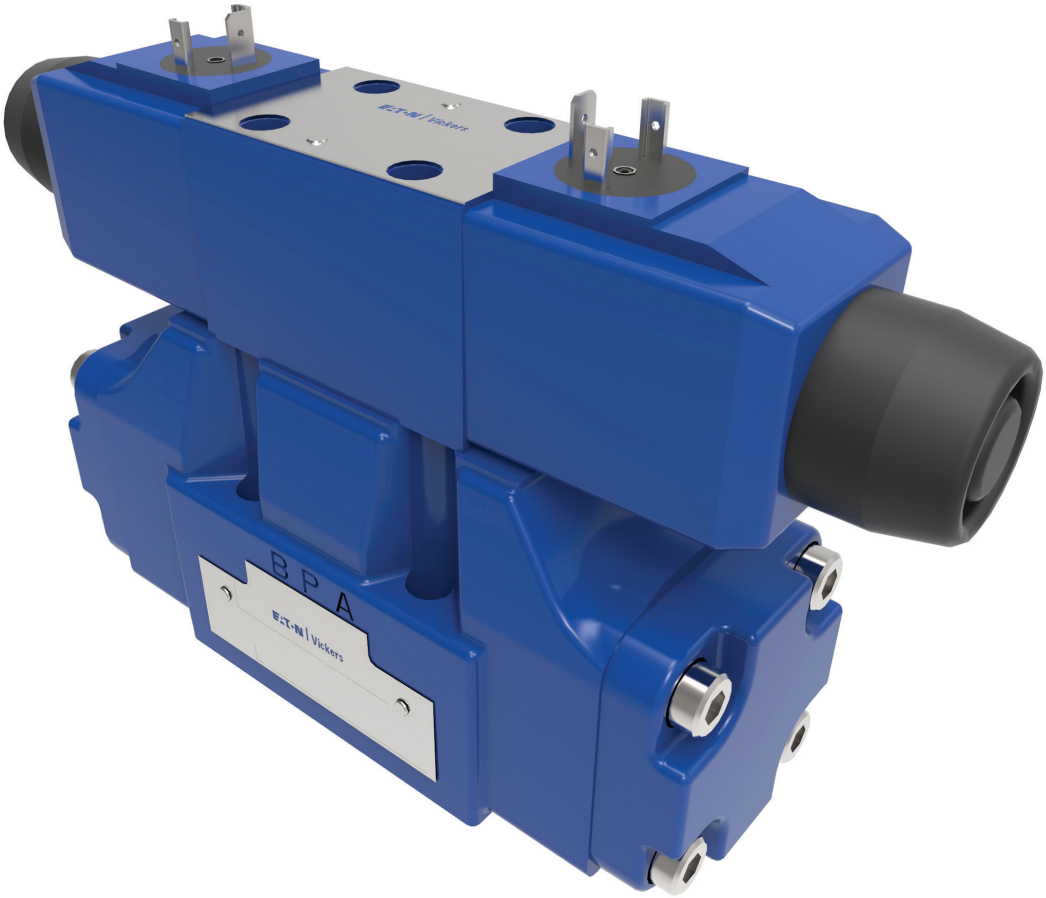

Pilot Operated Directional Valve

DG3V-5-10 Design

Solenoid Controlled Pilot Operated Directional Valve

DG5V-5-10 Design

General description

DG*V-5 valves are used primarily for controlling the starting, stopping and direction of fluid flow.

Two series of valves, DG5V solenoid controlled, pilot operated and DG3V pilot operated models are available with a wide selection of spools. These include meter in and meter-out spools and a regeneration type that can obviate extra valves essential in traditional circuit arrangements. All spools have been designed to provide good low shock, fast response characteristics which can be enhanced by optional stroke and/or pilot choke adjustments.

Models include spring offset, spring centered and detented versions.

Features and Benefits

- High pressure and flow capability for maximum cost-effectiveness.
- Low headloss to minimize power wastage.
- Low shock characteristics to maximize machine life.
- Facility to change solenoid coils without disturbing the hydraulic envelope.
- The many optional features, particularly for DG5V valves, permit matching to virtually every application within the valve's power capacity.
- Optional mainstage spool position monitoring switch (CE marked)

Typical Section DG5V-5-2C

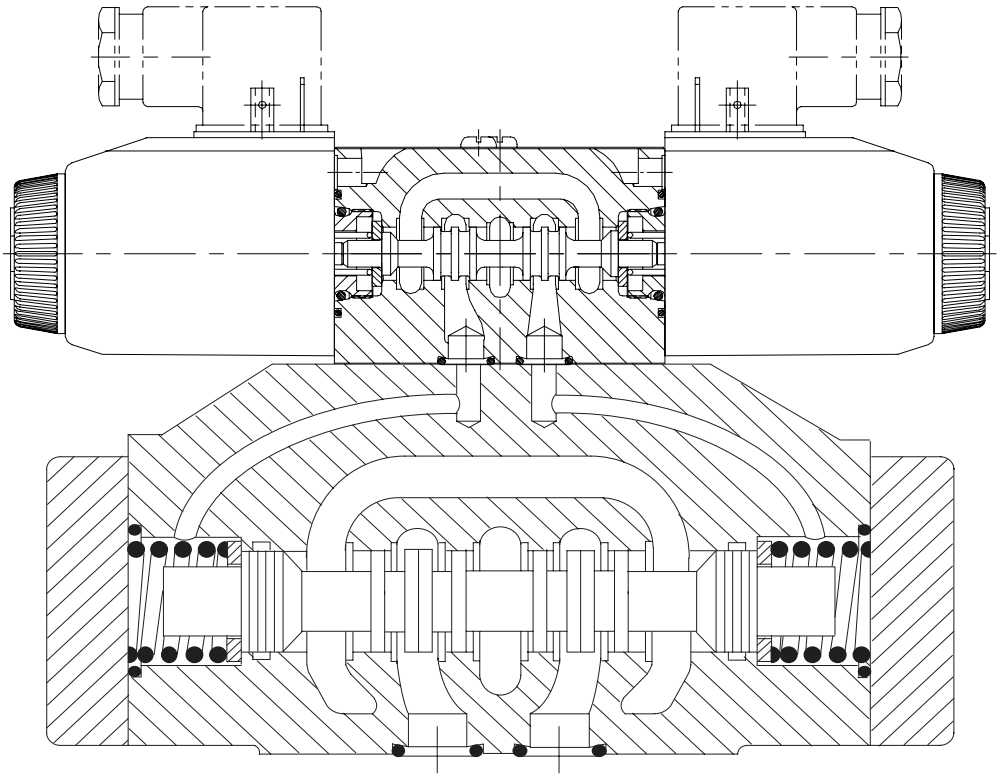

For pilot operated valves:

DG3V-5- ** * (-*) -1*

2 3 4 14

For solenoid controlled, pilot operated valves:

(F6-)DG5V-5- ** ** (**) (-P) (-E) (-T) (*) - (V) M - ***** - (L) ** - * -* -10**

1 2 3 4 5 6 7 8 9 10 11 12 13 14 15 16

1

Blank Viton

F6 Buna Nitrile/High CAN

2 Spool type

See "Functional Symbols" section on pages 133-134.

3 Spool spring arrangement

A Spring offset, end-to-end
AL Same as "A" but left hand build
B Spring offset, end-tocenter ▲
BL Same as "B" but left hand build ▲
C Spring centered ▲
N No-spring detented ▲
▲ Not available for DG3V-5

4 Spool control

1 Stroke adjustments, both ends ▲■
2 Pilot choke (dual) adjustments
27 Dual pilot choke and stroke adjustment "A" port end only ▼▲■
28 Dual pilot choke and stroke adjustment "B" port end only
3 Pilot choke and stroke adjustments ▲■
7 Stroke adjustment "A" port end only ▼
8 Stroke adjustment "B" port end only ▼
▲ Not applicable to DG5V-5-*B(L) models.
▼ Not applicable to models shown in the "Spring offset, end-to-center, opposite hand" section on page 134
■ Not applicable for spool "8" models

5 Main stage spool monitoring switch

Blank None
PCA Center sensing switch on "A" port end
PCB Center sensing switch on "B" port end
PDA Double offset sensing switch on "A" port end
PDB Double offset sensing switch on "B" port end
* The spool position monitoring switch shown on this technical document is CE marked and certified and complies to European Standard EN 61000-6-4: 2001 (Emissions) for Class A and European Standard EN 61000-6-2: 2001 (Immunity).

6 Pilot pressure supply

E Valve configured for external pilot supply to port "X"
Blank Internal pilot supply (port "X" must be blanked off, e.g. at the valve mounting face, when using internal pilot supply)

7 Pilot drain arrangement ◆

T Valve configured for internal pilot valve drain (port "Y" must be blanked off, e.g. at the valve mounting face, when using internal drain) Blank external drain from port "Y".
◆ See 15 for pressure limits.

8 Pilot valve manual override option

Blank Plain override(s) on solenoid end(s) only. ▲
H Water-resistant override(s) on solenoid end(s) ▲
Z No override at either end
▲ No overide in non solenoid end of single solenoid valve.

9 Solenoid identity method

V Solenoid "A" at port "A" end of pilot valve body and/ or solenoid "B" at port "B" end of pilot valve body, independent of main-stage port locations and spool type. Omit (except as noted below) for US ANSI B93.7 standard requiring solenoid "A" energization to connect main ports P and A and/or solenoid "B" energization to connect P and B, independent of solenoid location.
Note The "V" code is always used for valves with type "8" spool as the solenoid identity is the same for both methods of identification.

10 Flag symbol

M Electrical options and features

11 Solenoid type/ connection(s)

U ISO4400, DIN43650 connector
U1 ISO4400 fitted with PG11 plug
KU Top exit flying lead (150mm)
KUP4 Junior timer (Amp) connector
KUP5 Integral Deutsch connector
FW Flying lead with 1/2" NPT thread wiring housing
FTW Fly. lead wired terminal block & 1/2" NPT thread
Note Refer DG4V3 catalog for more options

12 Indicator lights

Blank None
L Solenoid indicator lights•
•Flying lead coil type only

(F6-)DG5V-5- ** ** (**) (-P) (-E) (-T) (*) - (V) M - ***** - (L) ** - * *15 -10**

1 2 3 4 5 6 7 8 9 10 11 12 13 14 15 15

13	**Surge suppressor/ damper**	
	D1	Diode positive bias
	D2	Negative bias
	D7	Transorb type
14	**Coil rating**	
		See Page 7 for circuit details
	B	110V AC 50Hz/120V AC 60 Hz
	BL	110V 50 Hz/120V 60 Hz
	D	220V AC 50 Hz/240V AC 60 Hz
	DS	28V DC 30 watt
	G	12V DC
	GL	12V DC
	H	24V DC
	HL	24V DC
	HM	24V DC 8 watt
15	**Port T or Y maximum pressure†**	
	6	160 bar (2300 psi), for AC solenoids only
	7	210 bar (3000 psi), for DC solenoids only
16	**Design number**	

Pilot pressure

a. Pilot pressure must always exceed tank line pressure by at least the requisite minimum pilot pressure. This also applies when combining open center spools (0, 1, 8, 9 and 11) with internal pilot pressure, but they should be used only with externally drained valves.

b. Internally drained valves may be used only when surges in the tank line cannot possibly overcome the minimum pilot pressure differential referred to above. When the possibility of pressure surges in the tank line exist, externally drained valves are recommended.

c. When DG5V-7-*N valves are de-energized the pilot and main spools remain in the last selected position, provided that pilot pressure is maintained. If pilot pressure fails, or falls below the minimum, the main spool will spring center.

Caution: Because of this in-built feature the flow conditions of the center position must be selected with care, for the effect on both the direction of flow and the pilot pressure.

Stroke adjustment options

These control the maximum opening of the main spool/ body passages by adjusting the limits of spool stroke. By this means, the response time and the pressure drop across the valve for any particular flow rate can be controlled. Stroke adjusters can be fitted at either or both ends of the main-stage valve for adjusting the stroke in one or both directions. One use of stroke adjusters is for controlling the metering characteristics of "X*" or "Y*"- type spools. (See model code #4.)

Pilot choke adjustment

Options These provide a meter-out flow control system to the fluid in the pilot chambers of main-stage valves. It allows the velocity of the mainstage spool to be controlled, thereby reducing transient shock condition. For optimum results, a constant reduced pilot pressure is recommended.

Control data, general

a. Dependent on the application and the system filtration, any sliding spool valve, if held shifted under pressure for long periods of time, may stick and not move readily due to fluid residue formation. It may therefore need to be cycled periodically to prevent this from happening.

b. Surges of fluid in a common drain line serving two or more valves can be of sufficient magnitude to cause inadvertent shifting of the spools. It is recommended that circuit protection be used, such as separate drain lines.

c. Control by stroke adjusters, pilot chokes and minimum-pilot pressure generator options is described on this page.

Functional symbols

Spool types

Shown in 3-position form, plus 2 transients.

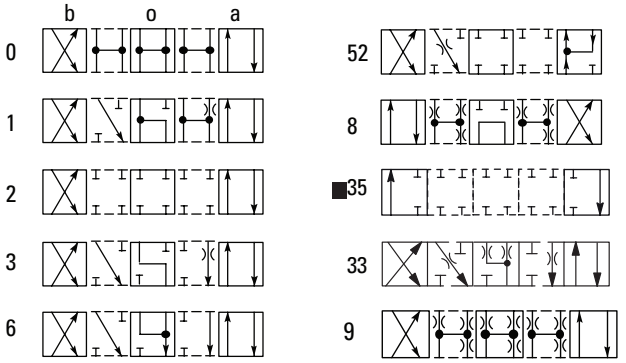

Notes:

1. In certain 2-position valves, the "o" position becomes an additional transient, i.e. in DG5V-5-**A(L) and DG5V-5-**N valves.

■ Only 35A available.

DG3V-5 Pilot operated models

Comprehensive and simplified symbols.

Spring centered, DG3V-5-C**
Spool types: All

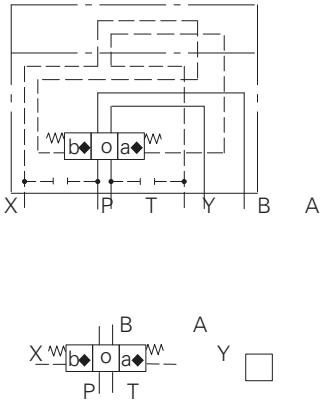

◆ "a" and "b" interchanged for spool type 8

DG3V-5-C models with pilot choke**
Obtained by specifying "2" at Model Code position

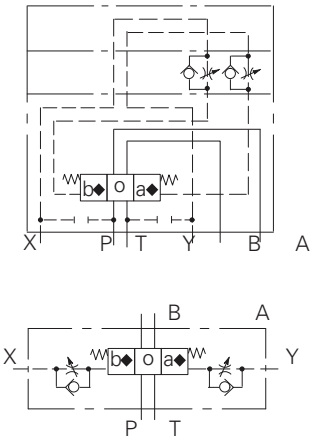

DG3V-5-2C

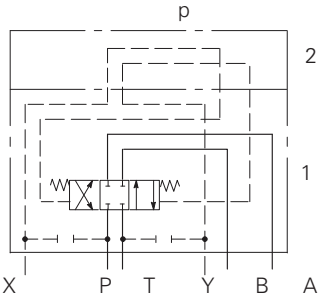

Note: That for clarity pilot lines (dotted lines in illustrations) are omitted from the main-stage nameplate.

DG5V-5-3C-2-E-T

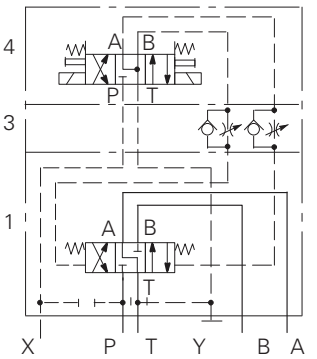

Symbols on nameplates

Typical illustrations for:

Control elements (i.e. solenoid pilot valve, choke module, cover plate) used with size 5 main stage valves are standard Eaton units complete with their individual nameplates including model code and symbols. The main stage carries the model code of the 2-stage valve and the functional symbol of the main stage spool. Referring to the examples, nameplates are located as follows:

1. On main stage (DG3V- 5/ DG5V-5)

2. On cover plate (DG3V-5)

3. On pilot choke module (DG5V-5)

4. On pilot stage valve (DG5V-5)

DG5V-5, Solenoid controlled, Pilot operated models ▲

Comprehensive and simplified symbols shown configured for external pilot supply and internal drain

Spring offset, End-to-end, DG5V-5-A**
Spool types: 0, 2, 6, 35, 52

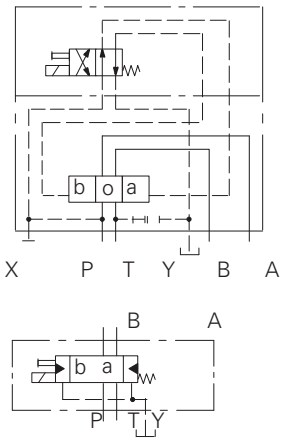

Spring offset, end-to-end, opposite hand, DG5V-5-AL**
Spool types: 0, 2, 6, 52

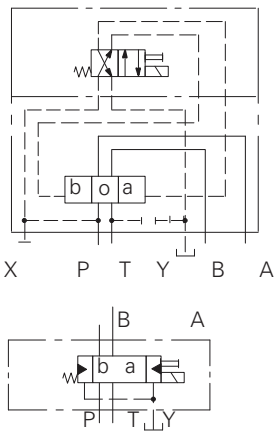

Spring offset, end-to-center

Models	Spool types
DG5V-5-****B**	0, 2, 52
DG5V-5-***BL**	8

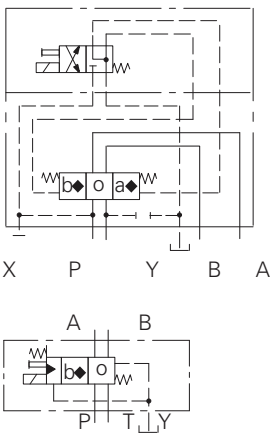

Spring offset, end-to-center, opposite hand
Models spool types

DG5V-5-***B**	8
DG5V-5-****BL**	0, 2, 52

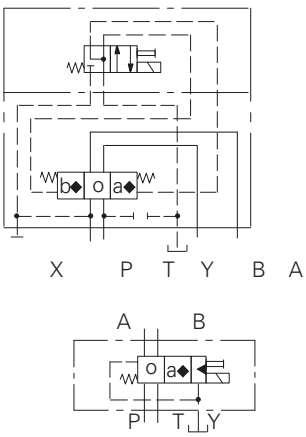

Spring centered, DG5V-5-C**
Spool types: All

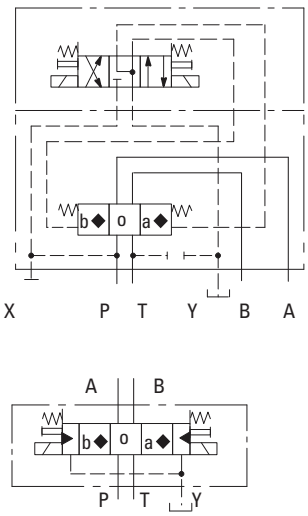

Detented, DG5V-5-N ■**
Spool types: 0, 2, 6, 52

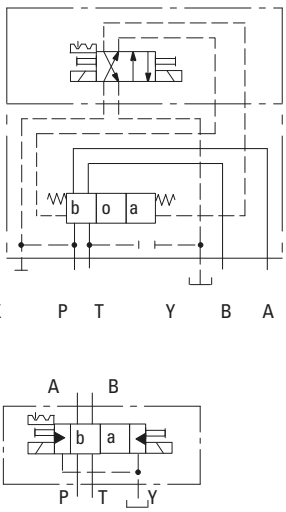

DG5V-5 Options
The following are shown in a DG5V-5-**C example:

1. Pilot choke module
2. External pilot connection
3. Internal drain

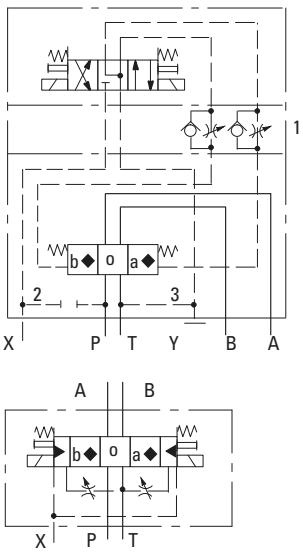

■ Subject to availability of pilot pressure.

▲ All main-stage assemblies are spring-centered.
The conditions described depend on the availability of pilot pressure in excess of 4.5 bar (65 psi) to move the spools against these springs. This is particularly important when using external pilot pressure supply

Solenoid Identification (refers to installation drawing, page 10 - 12) For model code variants:

Position 3, spool spring arrangement
Position 8, solenoid identity method

Model	Spool types	Solenoid identify main port A end	Solenoid identify main port B end
DG5V-5-*A/B(-2)(-E)(-T)(-**)-M	All except "8"	-	B
DG5V-5-*A/B(-2)(-E)(-T)(-**)-VM	All except "8" ""8" only	- B	A -
DG5V-5-*AL/BL(-2)(-E)(-T)(-**)-M	All except "8"	A	-
DG5V-5-*AL/BL(-2)(-E)(-T)(-**)-VM	All except "8" ""8" only	B -	- A
DG5V-5-*C/N(-2)(-E)(-T)(-**)-M	All except "8"	A	B
DG5V-5-*C/N(-2)(-E)(-T)(-**)-VM	All spools	B	A

Operating data

III-C

Maximum pressures:	
DG3V-5 valves; ports:	
P, A, B, X and Y	315 bar (4500 psi)
T	315 bar (4500 psi)
DG5V-5-(L)(-*)(-E)(-*) valves, (externally drained); ports:**	
P, A, B, T and X	315 bar (4500 psi) ▲
Y with AC solenoid	160 bar (2300 psi)
Y with DC solenoid	210 bar (3000 psi)
DG5V-5-(L)(-*)(-E)-T(-*) valves, (internally drained)u; ports:**	
P, A, B and X	350 bar (5000 psi) ▲
T with AC solenoid	160 bar (2300 psi)
T with DC solenoid	210 bar (3000 psi)
Maximum flow (for both DG3V-5 and DG5-V5)	160 L/min (42Usgpm)
Pilot pressures	Refer segment B for pilot valve data

▲ The DG5V, 50 design two-stage valves have been designed to satisfy the needs of most applications.

Consult your Eaton representative about an alternative model if:

a. Valves are required to remain pressurized for long periods without frequent switching, and /or

b. Back pressure on the drain port of externally drained models (or the tank port of internally drained models) is required to rise above 210 bar (3000 psi).

Electrical information		
Voltage ratings, DG5V valves	See 14 in "model code" on page 131	
Voltage limits, DG5V valves:		
Maximum voltage	See "Temperature limits", on page 136	
Minimum voltage	90% of rated voltage	
Power consumption, DG5V valves with AC solenoids:	**Initial VA rms**	**Holding VA rms**
Dual-frequency coils at 50 Hz, types "B" and "D"	280	61
Dual-frequency coils at 60 Hz, types "B" and "D"	300	58
Power consumption, DG5V valves with DC solenoids	30W at rated voltage and 20 C (68 F)	
Relative duty factor, DG5V valves	Continuous; ED = 100%	
Type of protection, DG5V valves:		
ISO 4400 coils with plug fitted correctly	IEC 144 class IP65	
Junction box	IEC 144 class IP65 (NEMA 4)	
Coil winding	Class H	
Lead wires (coil types "F****")	Class H	
Coil encapsulation	Class F	

Temperature limits:	**See appendix**
Fluid temperature limits	See appendix
Ambient temperature limits:	-20°C (-4°F)
Minimum ambient, all valves	
Maximum ambients, DG5V valves with coils listed in 12 in "Model Code" two pages back, and under conditions stated below:	
Dual-frequency coils:	
at 50 Hz and 107% of rated voltage	65°C (150°F)
at 50 Hz and 110% of rated voltage	65°C (150°F)
at 60 Hz and 107% of rated voltage	65°C (150°F)
at 60 Hz and 110% of rated voltage	65°C (150°F)
Single-frequency (50 Hz) coils at 50 Hz and	65°C (150°F)
110% of rated voltage	
DC coils at 110% of rated voltage	70°C (158°F)

Temperature limits:	**See appendix**
Valves	See page 139, 140, 141
Mass (weight), basic models:	**kg (lb) approx.**
DG3V-5-*A(L)	10,0 (22.0) ◆
DG3V-5-*/*B(L)/*C	7,3 (16.1) ◆
DG5V-5-*A/B (AC voltages)	8,4 (18.5) ◆
DG5V-5-*A/B (DC voltages)	8,5 (18.7) ◆
DG5V-5-*C/N (AC voltages)	8,7 (19.2) ◆
DG5V-5-*C/N (DC voltages)	9,1 (20.0) ◆
◆ Add 1,1 kg (2.4 lb) when pilot chock adjustment is fitted.	

Note : For information on pilot valves please refer segment B of the catalog.

Pilot pressures

Differential pressure, i.e. pilot pressure at port P (or port X) minus pilot drain pressure at port T (or port Y).

Maximum 315 bar (4567 psi)

Minimum (for max. flow):
For spool types 0, 1, 8 ♦ , 11 4,5 bar (65 psi)

For spool type 6 8 bar (116 psi)

For spool types 2, 3, 31, 33, 52 10 bar (145 psi)

All main stages are spring centered. Selection of spool offset positions "a" or "b" requires pilot pressure equal to or in excess of the above minimums to move the spool against the spring force. This is particularly important when using external pilot pressure supply.

♦ When using a type 8 spool with the valve configured for internal pilot supply, flow through the valve should be at least 80 L/min (21 USgpm) to generate 4,5 bar (65 psi) pressure drop when the spool is in the center position (flow P to T).

Based on petroleum oil at 36 cSt (168 SUS) and at 50 C (122 F).

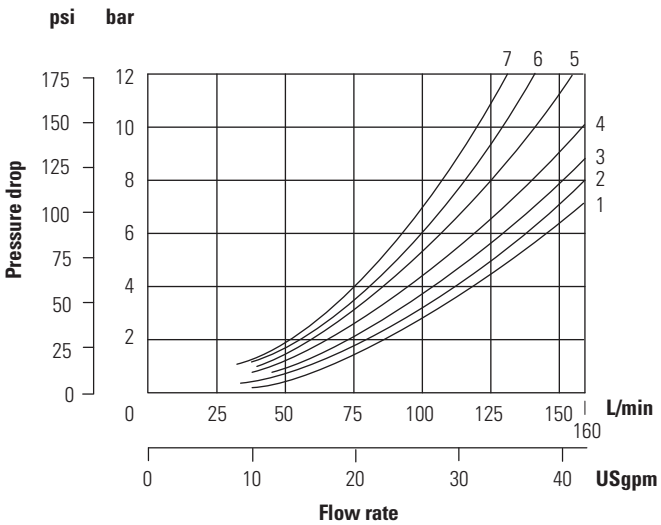

DG5V-5-**N

The spool of the pilot valve of this model is detent-held in its last selected position, and the spool will remain ▲ in this position after the solenoid has been de-energized.

The main stage is spring-centered and requires at least minimum pilot pressure to hold the spool in its offset ("detent-held") position. When pilot pressure falls below the recommended minimum, the main-stage spool will move to position "o" under the action of the centering springs. The system designer should ensure that under these conditions the flow condition at center position "o" is appropriate for the application.

▲ See comment in "Mounting Attitude".

Pilot choke module

This allows the velocity of the main-stage spool to be controlled, thereby reducing transient shock conditions. For best results a constant, low pilot pressure is recommended.

Spool type	P → A	B → T	P → B	A → T	A → T	B → T	P → T
0	4	4	1	4	1	3	5
1	1	4	1	4	3	-	6
2	1	2	1	5	-	-	-
3	2	3	1	4	5	-	-
6	1	2	1	3	-	-	-
8	4	2	2	6	-	-	7
33	2	2	3	4	-	-	-
35A	See page 14						
52	2	3	3	5	-	-	-

Solenoid controlled models with ISO 4400 (DIN 43650) electrical connections and optional pilot choke

DG5V-5-**(L)(-2)(-E)(-T)(-*)-(V)M-U example For solenoid identification see previous page.

▼ May vary according to plug source.

■ Alternative plug positions by loosening knurled nut counter-clockwise, turning coil and re-tightening nut.

▲ Cable entry can be positioned at 900 either way from position shown, by re-assembling the contact holder into the appropriate position inside the plug connector housing.

Milimeters (inches)

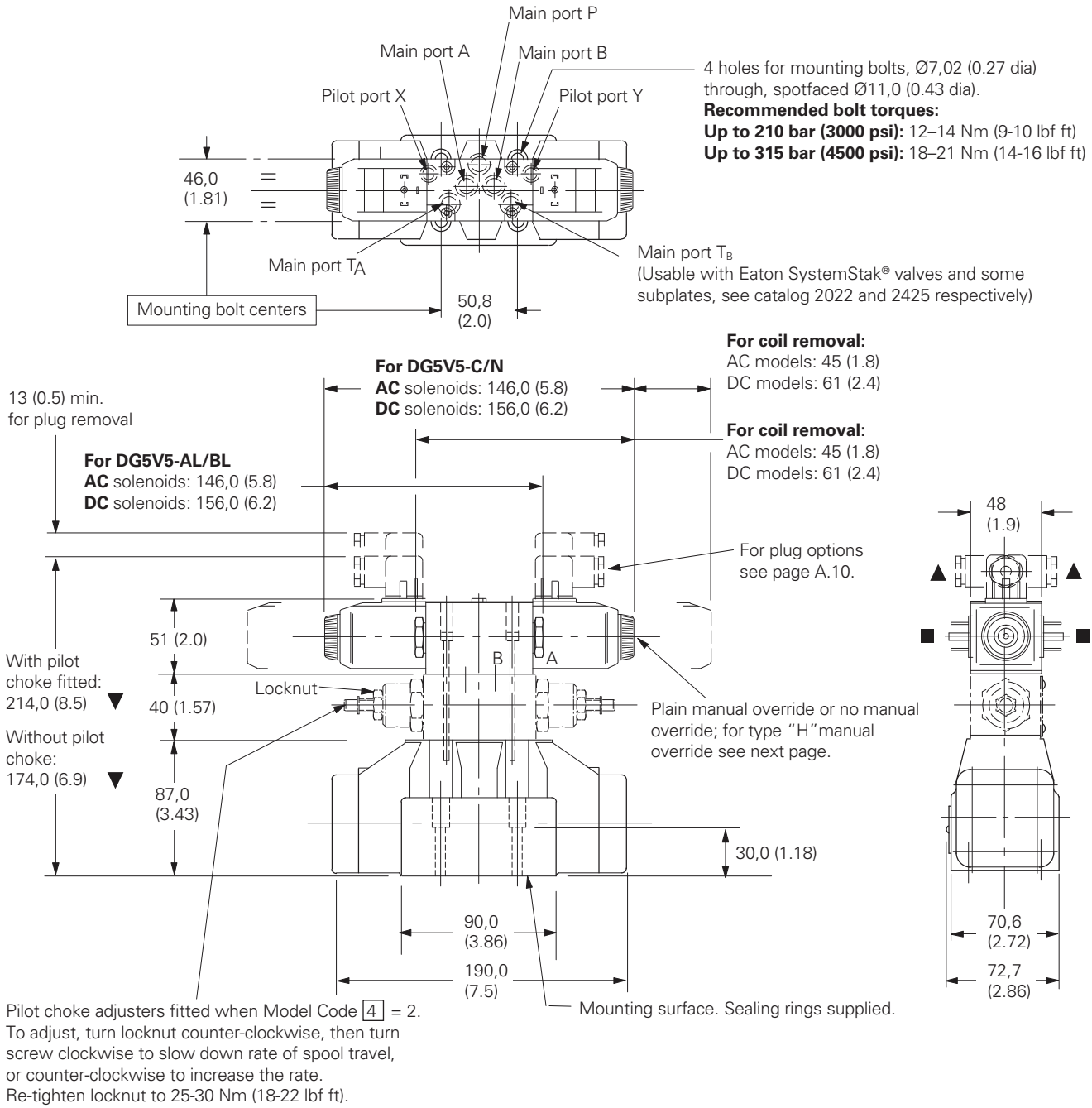

Installation dimensions

Solenoid controlled models with junction box having optional terminal strip and indicator lights
DG5V-5-***(L)(-2)(-E)(-T)(-*)-(V)M-F****(L) example

For solenoid identification see page A.7.

Available also with other options shown on previous and following pages.

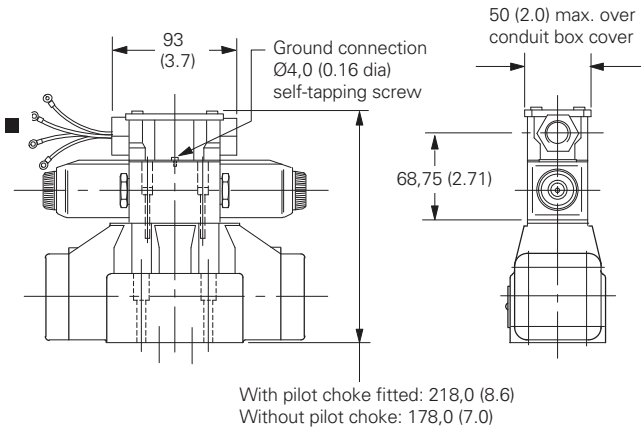

Pilot operated models with optional pilot choke
DG3V-5-** C(-2) example

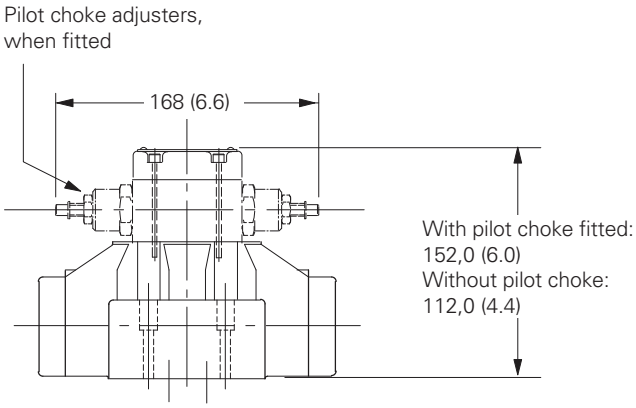

DG5V-5 with main stage spool monitoring switch "PCA", "PCB", "PDA", "PDB models (LVDT style)

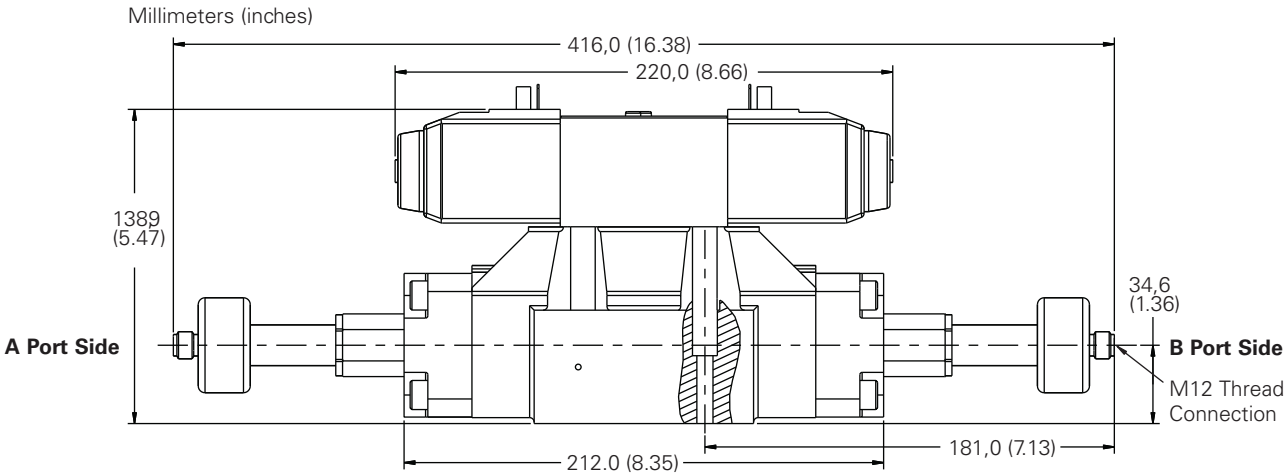

Valve for safety circuit application (35A Spool)

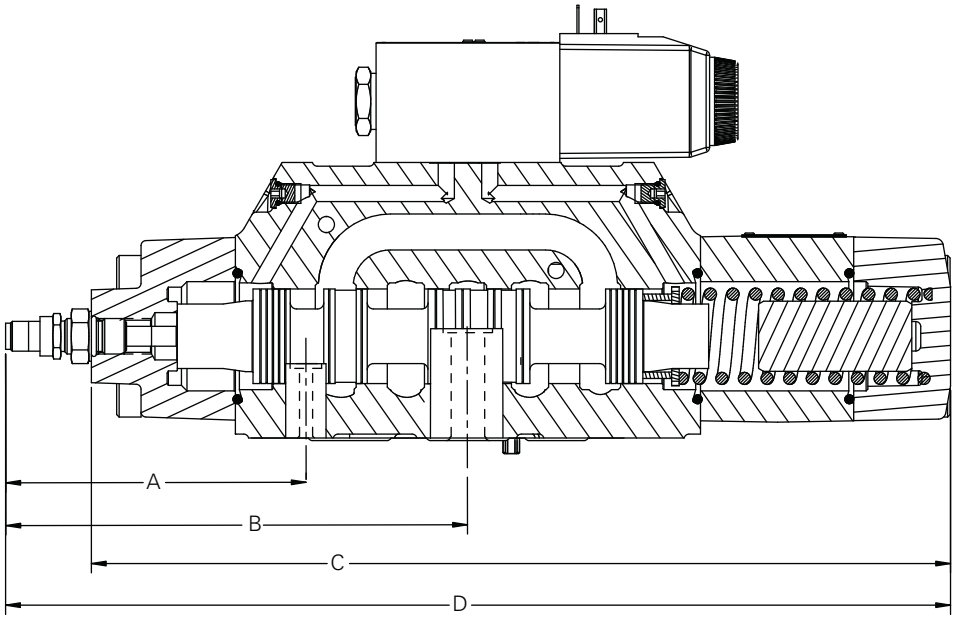

Main Stage Hydraulic Symbol

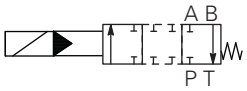

DG5V with PPA Switch Option Shown

Model	A	B	C	D	Leakage P-A	Flow curve
	mm (in)	mm (in)	mm (in)	mm (in)	cc/min (in³/min)	
DG5V5-35A	118.5 (4.67)		234.7 (9.24)	262.1 (10.32)	Available upon request	Available upon request

Electrical Information

Mainstatge spool monitoring switch [LVDT style] specification

III-C

Specifications	
Supply voltage (Vs)	24VDC ± 20%
(Full wave bridge with capacitor) reverse polarity protection	MAX. 300 V installed
Ripple voltage	10%
Current consumption	40 mA APPROX
Outputs	Nc contact positive
Sensing distance (offset position)	9.36 to 9.65 mm
Sensing distance (from center position)	± 0.35 to 0.65 mm
Hysteresis	&#2;0.06mm
Output voltage	(No short circuit protection)
Signal 1	Vs – 2.5 V
Signal 0	< 1.8 V
Output current	< 400 mA AT INPUT + 20%
Environmental protection	IP65 (with mounted plug)
Operating temp range	-20° C to +85° C
Maximum operating pressure	315 bar (4500 psi)
CE Declaration of Conformity No.	00 02 002 9 93

Attention: EMC only ensured when using screened cables and screened plug casing!

Typical "PCA/PCB" output (for sensing center position)

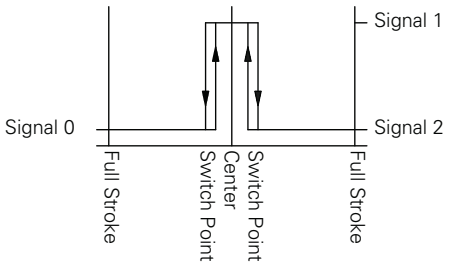

Signal 0 = Volt age at pin 2/4 < 1.8V
Signal 1 = Volt age at pin 2/4 > (Vs – 2.5V)

Typical "PDA/PDB" output (for full shift sensing)

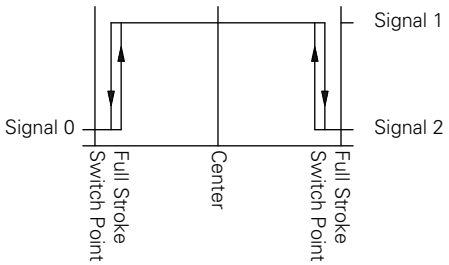

Signal 0 = Volt age at pin 2/4 < 1.8V
Signal 1 = Volt age at pin 2/4 > (Vs – 2.5V)

Electrical Schematic and Mating Connector Detail

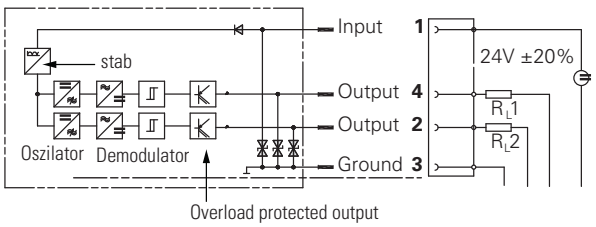

R L1,RL 2 = e.g. Coil Resistance of the switch relay >/= 60 OHMS

Connector Detail