RE 51 135/11.02

Replaces: 04.97

Hydraulic steel reservoir Type ABTSR (round reservoir)

Reservoir capacities 1000 to 20 000 litres

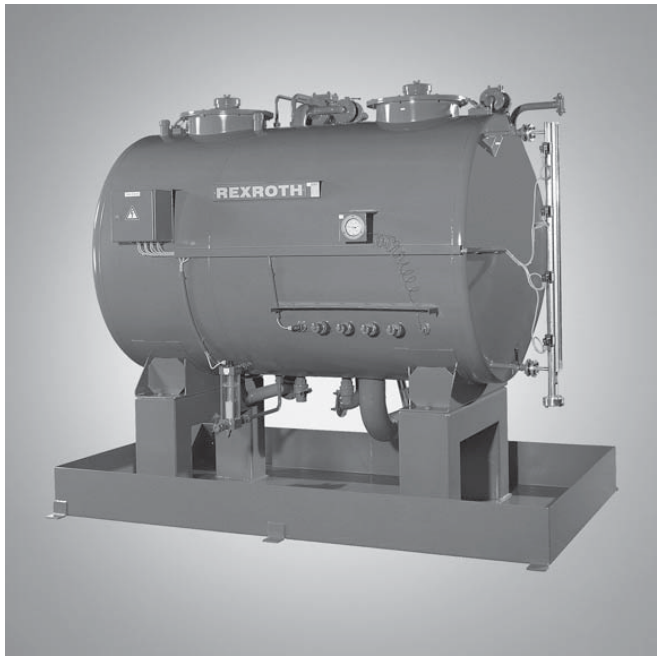

H/D 20316

Type ABTSR…

Overview of contents

Contents	Page
Features	1
Area of application; general	2
Technical data	2
Ordering details	3
Circuits	4
Connection sizes for flanges and fittings	4
Selection table	5
Unit dimensions	6 and 7
Fluid volumes	8

Features

Due to their form, the reservoirs have a high static and dynamic stiffness.

The dimensions are to DIN 24 567.

So that the inside of the reservoir can be inspected, two adequately sized openings are provided on the top of the reservoir.

The number of openings is dependent on the reservoir size and are sealed by DN 500 domed covers.

The design features of this type of resevoir are:

- Nominal sizes from 1000 to 20 000 litres
- Pipe work running through the reservoir side wall with welded fittings, SAE or DIN flanges
- Separated suction and return areas
- Reservoir can be supplied with baffle or dividing wall
- Lifting lugs for transport purposes
- Steps inside the reservoir for nominal sizes 5000 to 13 000 litres
- Ladders within the reservoir for nominal sizes 16 000 and 20 000

© 2002
by Bosch Rexroth AG, Industrial Hydraulics, D-97813 Lohr am Main

All rights reserved. No part of this document may be reproduced or stored, processed, duplicated or circulated using electronic systems, in any form or by means, without the prior written authorisation of Bosch Rexroth AG. In the event of contravention of the above provisions, the contravening party is obliged to pay compensation.

This document was prepared with the greatest of care, and all statements have been examined for correctness. This document is subject to alterations for reason of the continuing further developments of products. No liability can be accepted for any incorrect or imcomplete statements.

Area of application

Non-pressurised fluid reservoirs provide a system with a container for holding the required operating medium. They also have further important tasks:

– Stabilising the returning medium

– Air, water and contaminant separation

The size of the reservoir is dependent on the size and number of hydraulic pumps which are to be found in the hydraulic system. A guideline for selecting the reservoir size is 3-5 times the pump flow, however, the fluid volume contained within cylinders, accumulators and pipe work has to be also taken into account.

When using fire resistant fluids the reservoir volume has to be increased by 5-8 times.

Care has to be taken that materials and internal paint finishes are compatible with the pressure medium.

General

For systems with increased requirements, stainless steel hydraulic reservoirs are used.

A paint finish (internal and external) is **not** provided for these reservoirs.

All openings are plugged before despatch.

Technical data

Reservoir contents		1000 to 20 000 litres
Dimensions		To DIN 24 567
Pressure fluid		Dependent on the reservoir material suitable for use with mineral oil (HL; HLP); HFC-, HEES-, HFD-R-, HEPG-, HETG - fluids
Pressure		Reservoirs are suitable for use with pressure fluids at atmospheric pressure
Surface finish:	1st primer coat	All steel components are primered with zinc dust paint (reservoir interior also).
	2nd primer coat	Epoxy undercoat RAL 5009 (external)
		The internal paint finish is dependent on the hydraulic fluids being used

Ordering details

ABTSR – / 02– | | | | | | | | **– A**

Round reservoir to Rexroth standard RN 116.02 **= ABTSR**

Reservoir capacity in litres

Reservoir NS 1000	**= 01000**
Reservoir NS 1500	**= 01500**
Reservoir NS 2000	**= 02000**
Reservoir NS 3000	**= 03000**
Reservoir NS 4000	**= 04000**
Reservoir NS 5000	**= 05000**
Reservoir NS 6000	**= 06000**
Reservoir NS 7000	**= 07000**
Reservoir NS 10 000	**= 10000**
Reservoir NS 13 000	**= 13000**
Reservoir NS 16 000	**= 16000**
Reservoir NS 20 000	**= 20000**

Reservoir type to RR standard AB-E 40-02 **= 02**

Material (reservoir)

Steel St 37.2	**= S**
Stainless steel	**= E**

Sight glass

Optical to Rexroth standard AB-E 31-23	**= 1**
Optical/electrical to Rexroth standard AB-E 31-07	**= 2**

Model

Without dividing wall, one sight glass with oil drain	**= 1**
With dividing wall and overflow (available from 3000 litres), two inspection covers, two sight glasses with oil drain	**= 2**
With baffle (fine filter at base and baffle made from perforated metal) and overflow; one sight glass with oil drain	**= 3**

Thermostat

No code =	Without thermostat
T =	With thermostat

Heater

No code =	Without heater
H =	With heater

Water warning device

No code =	Without water warning device
Y =	With water warning device

Seals for inspection covers

M =	NBR seals, suitable for mineral oil (HL; HLP) to DIN 51 524 with internal paint finish to Rexroth standard AB-E 01-03.05
V =	FKM seals, suitable for water-free synthetic (HFD-R), organic (HFD-U) and fast bio-degradable fluids (HEES, HEPG) without internal paint finish, free of non-ferrous metals
W =	NBR seals, suitable for water containing fluids (HFC), and fast bio-degradable fluids (HETG) without internal paint finish, free of non-ferrous metals

Version A

Circuit

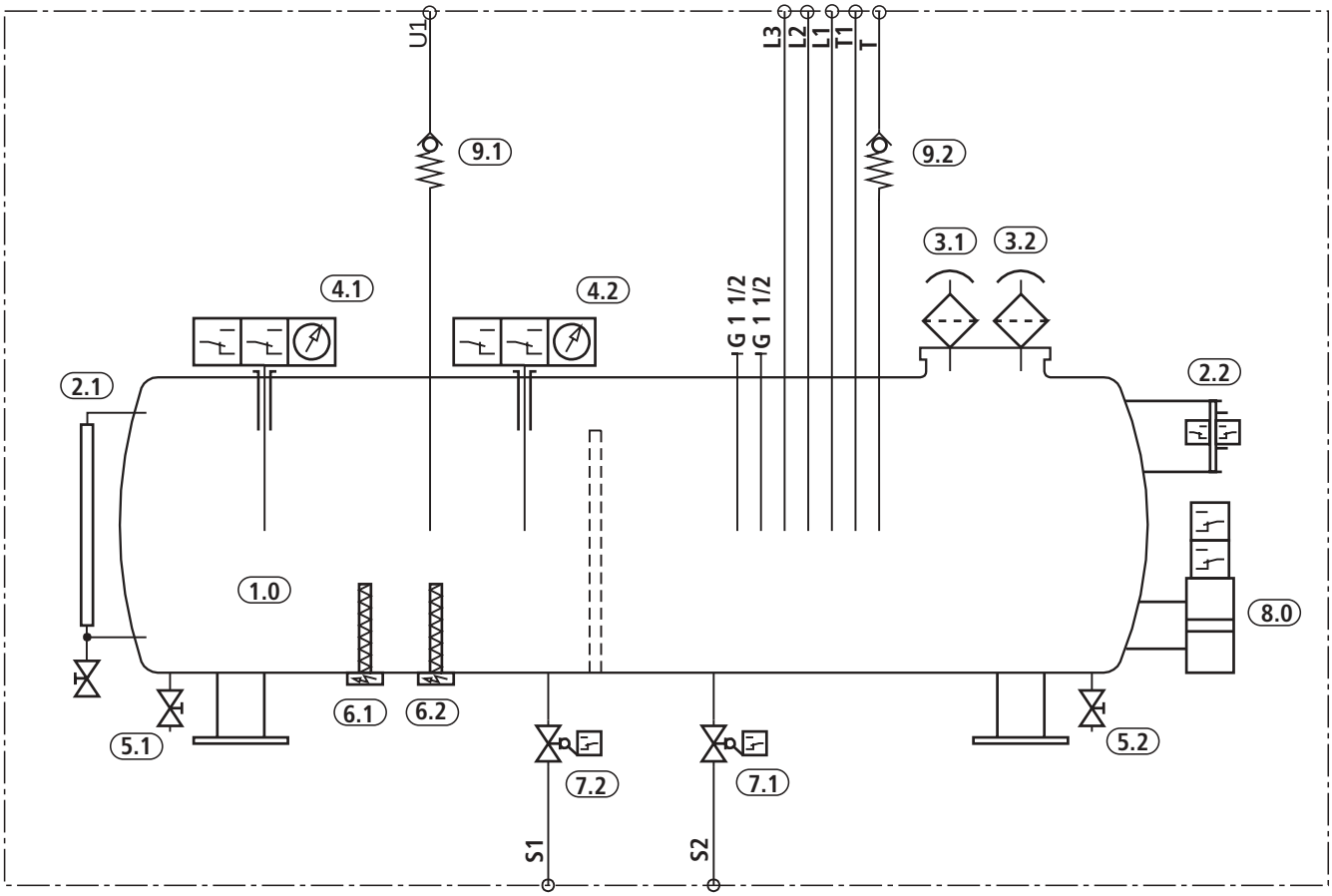

Parts list

1.0	Hydraulic reservoir
2.1	Sight glass (optical)
2.2	Sight glass with float switch, optional (optical/electrical)
3.1; 3.2	Filler/breather
4.1; 4.2	Thermostat
5.1; 5.2	Isolator valve
6.1; 6.2	Immersion heater
7.1; 7.2	Isolator with limit switch monitoring
8.0	Water warning device
9.1; 9.2	Check valve

Connections sizes for flanges and fittings

Reservoir NS		Suction line S1	Suction line S2	Tank line T	Tank line T1	Return U1 circulation circuit	Drain line L1, L2, L3
	Connection flanges fittings	Flange DIN 2632/2633 NW	Flange DIN 2633 NW	Flange DIN 2633 NW	Flange SAE 3000 PSI NW	Flange DIN 2633 NW	Fitting Ø in mm
1000		100	80	80	40	40	28
1500		100	80	80	40	40	35
2000		150	100	100	50	50	35
3000		150	125	125	65	65	42
4000		200	125	125	65	65	42
5000		200	125	125	65	65	42
6000		250	125	150	65	65	48.3
7000		250	150	150	80	80	48.3
10 000		250	150	200	80	80	48.3
13 000		300	150	200	100	100	60.3
16 000		350	150	250	100	100	60.3
20 000		350	150	250	100	100	60.3

Selection tables

After selecting the reservoir size and the options, the Material No. can be defined.

The Material No. contains all of the components that are shown on the hydraulic circuit.

Reservoir made of steel St 37.2 (1.0037)

Reservoir NS Volume in capacity	Weight in kg	With sight glass optical Material No.	With sight glass optical / electrical Material No.
1000	350	R900575217	R900575239
1500	420	R900575227	R900575240
2000	520	R900575228	R900575241
3000	630	R900575229	R900575242
4000	725	R900575230	R900575243
5000	930	R900575225	R900575244
6000	1010	R900575232	R900575245
7000	1120	R900575233	R900575246
10 000	1430	R900575231	R900575247
13 000	1780	R900575234	R900575248
16 000	2520	R900575235	R900575249
20 000	2870	R900575237	R900575250

Reservoir made of stainless steel (1.4301)

Reservoir NS Volume in litres	Weight in kg	With sight glass optical Material No.	With sight glass optical / electrical Material No.
1000	350	R900579563	R900579566
1500	420	R900579564	R900579572
2000	520	R900579565	R900579571
3000	630	R900579560	R900579574
4000	725	R900579559	R900579577
5000	930	R900579557	R900579578
6000	1010	R900579556	R900579579
7000	1120	R900579555	R900579580
10 000	1430	R900579570	R900579575
13 000	1780	R900579569	R900579581
16 000	2520	R900579568	R900579587
20 000	2870	R900579567	R900579588

Unit dimensions

(Dimensions in mm)

Form A

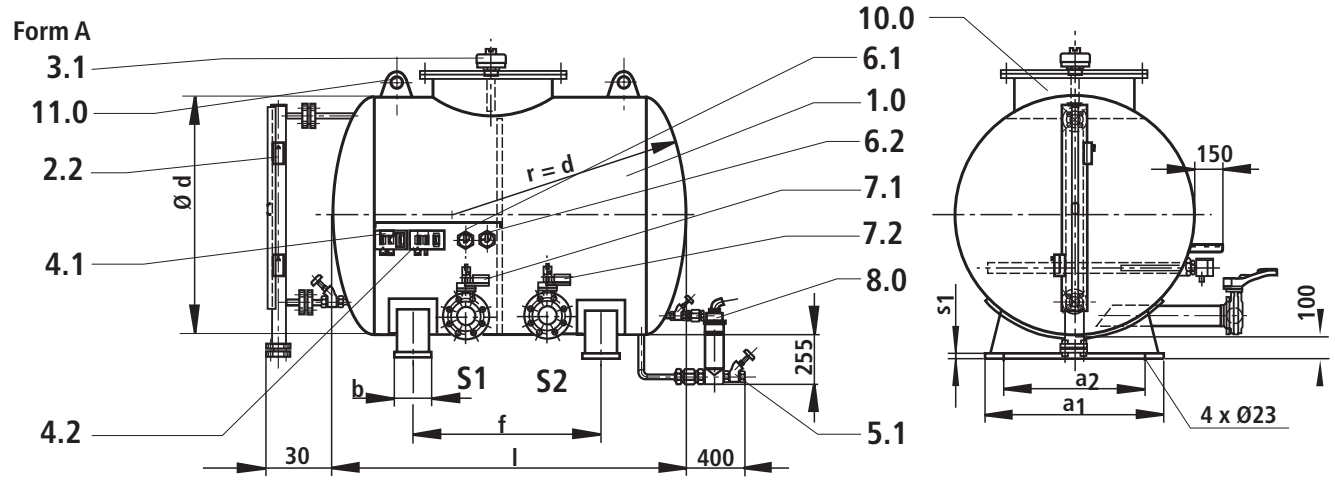

Form B

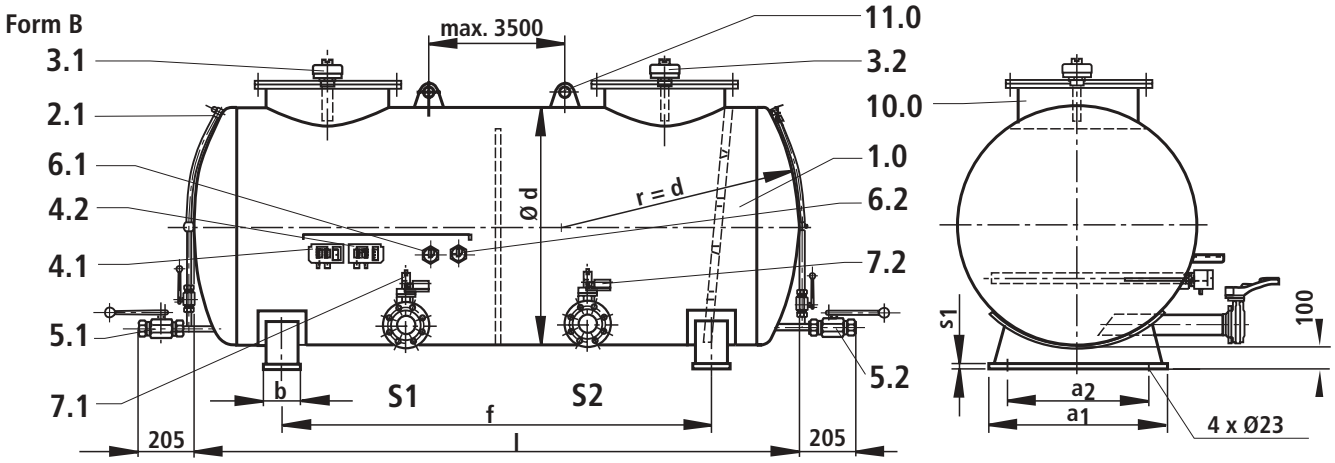

Parts list

1.0 Hydraulic reservoir
2.1 Sight glass (optical)
2.2 Sight glass with float switch, optional (optical/electrical)
3.1; 3.2 Filler/breather
4.1; 4.2 Thermostat
5.1; 5.2 Isolator valve
6.1; 6.2 Immersion heater
7.1; 7.2 Isolator with limit switch monitoring
8.0 Water warning device
10.0 Inspection cover, access hole 500
11.0 Lifting lugs

Nominal size	Usable volume in litres			a_1	a_2	b	Ø d	f	l	s_1	Form	Weight approx. kg
		V_{max}	V_{min}	ΔV_{max}								
1000	920	320	600	750	600	150	1000	765	1510	8	A	300
1500	1270	450	820	750	600	150	1000	1400	2050	8	A	350
2000	1810	640	1170	950	800	150	1250	1100	1830	10	A	380
3000	2800	990	1810	950	800	150	1250	1920	2740	10	A	550
4000	3620	1290	2330	950	800	150	1250	2740	3490	10	B	640
5000	4540	1550	2990	1200	1050	300	1600	1770	2820	10	A	800
6000	5300	1810	3490	1200	1050	300	1600	2250	3260	10	B	1010
7000	6130	2100	4030	1200	1050	300	1600	2770	3740	10	B	1000
10 000	8920	3070	5850	1200	1050	300	1600	4290	5350	10	B	1320
13 000	11 710	4040	7660	1200	1050	300	1600	5625	6960	10	B	1730
16 000	14 930	5050	9880	1750	1600	550	2000	4210	5550	12	B	2470
20 000	18 900	6420	12 480	1750	1600	550	2000	5395	6960	12	B	2820

Note:

To allow for heat expansion the reservoir should only be rigidly fixed to one founting mounting foot.

Form A

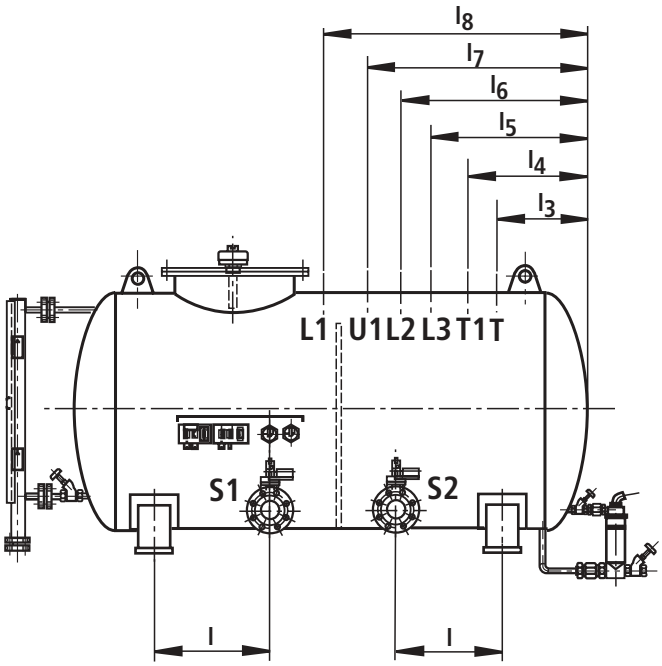

S1, S2 = Suction line
T, T1 = Tank line
U1 = Return, circulation circuit
L1, L2, L3 = Drain lines

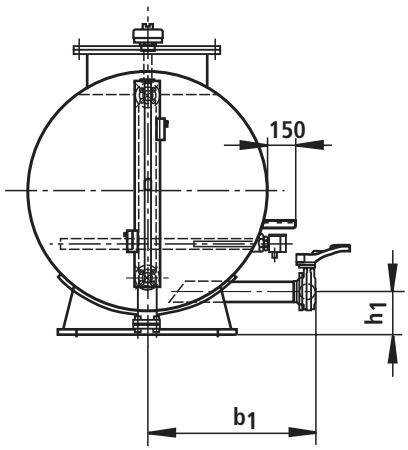

Form B

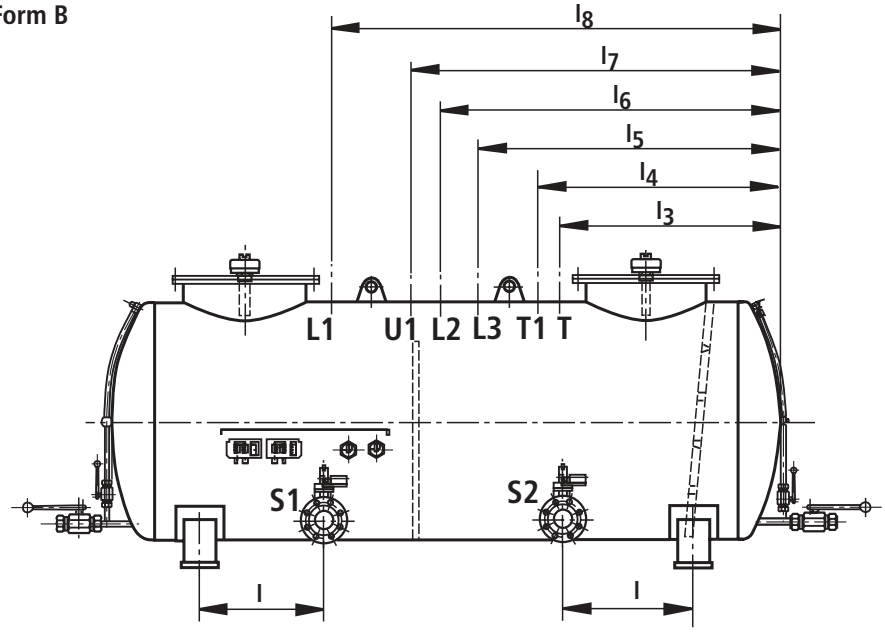

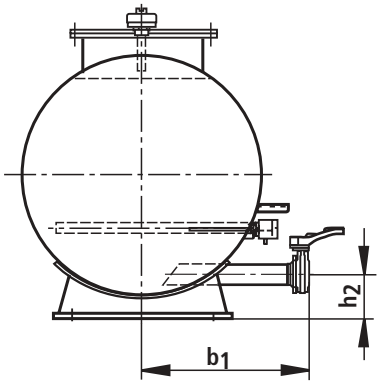

Spacing dim. / Nom. size	1000	1500	2000	3000	4000	5000	6000	7000	10 000	13 000	16 000	20 000
l_1	150	300	300	450	–	400	–	–	–	–	–	–
l_2	–	–	–	–	400	–	450	550	600	600	700	700
l_3	350	365	425	415	1260	470	1300	1315	1365	1365	1275	1500
l_4	350	570	425	690	1530	770	325	1625	1860	1860	1860	1900
l_5	500	725	625	935	290	990	1060	325	2175	2200	2400	3100
l_6	500	820	625	1030	1700	1100	1060	325	2310	2400	2500	3200
l_7	500	920	740	1210	1700	1260	1550	1820	2520	3300	2700	3350
l_8	1200	1765	1480	1520	2150	1550	1800	2110	3000	3750	3100	3700
b_1	590	590	715	715	745	870	950	950	950	1060	1150	1150
h_1	260	260	285	285	310	310	325	325	325	350	375	375

Fluid volume in relation to the filling height

This table is used to determine the contents of a horizontal round hydraulic oil reservoir made from steel in relation to the filling height.

Reservoir NS	1000	1500	2900	3000	4000	5000	7000	10 000	13 000	16 000	20 000
Ø d	1000		1250			1600				2000	
h	Contents in relation to height in litres										
1988										16 390	20 760
1900										16 120	20 420
1800										15 600	19 760
1700										14 930	18 900
1600										14 140	17 910
1590						5170	6990	10 190	13 390	–	–
1500						5060	6840	9960	13 080	13 270	16 800
1400						4830	6530	9500	12 480	12 330	15 610
1300						4540	6130	8920	11 710	11 350	14 360
1240			2000	3100	4000	–	–	–	–	–	–
1200			1980	3070	3970	4200	5670	8250	10 830	10 320	13 060
1100			1880	2910	3760	3830	5170	7520	9870	9270	11 730
1050			1810	2800	3620	3630	4900	7130	9360	8740	11 060
1000			1740	2680	3460	3430	4630	6740	8840	8200	10 390
990	1060	1470	–	–	–	–	–	–	–	–	–
950	1040	1450	1650	2550	3290	3220	4350	6330	8310	7670	9720
900	1010	1400	1560	2410	3110	3010	4070	5930	7780	7140	9040
850	970	1340	1470	2270	2920	2800	3790	5510	7240	6610	8380
800	920	1270	1370	2110	2730	2590	3500	5100	6700	6080	7720
750	860	1200	1270	1960	2530	2370	3220	4690	6160	5560	7060
700	800	1110	1160	1800	2320	2160	2930	4280	5620	5050	6420
650	740	1020	1060	1630	2110	1950	2650	3870	5090		
600	670	930	950	1470	1900	1750	2370	3470	4560		
550	600	830	840	1310	1690	1550	2100	3070	4040		
500	530	740	740	1150	1490						
450	460	640	640	990	1290						
400	390	550									
350	320	450									
300											
250											
200											
180											
160											
140											
120											
100											

The values contained within the bold lines show the range covering the maximum and minimum fluid levels.

d = Reservoir Ø in mm
h = Filling height in mm
V = Volume in litres

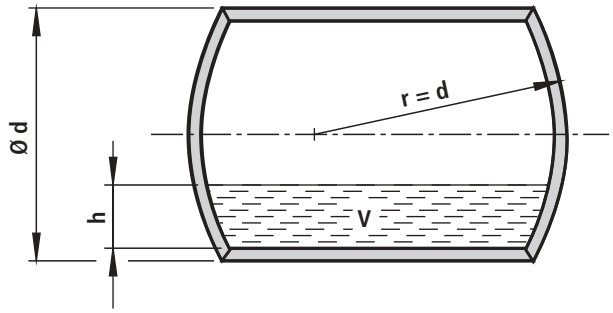

Bosch Rexroth AG
Industrial Hydraulics

D-97813 Lohr am Main
Zum Eisengießer 1 • D-97816 Lohr am Main
Telefon 0 93 52 / 18-0
Telefax 0 93 52 / 18-23 58 • Telex 6 89 418-0
eMail documentation@boschrexroth.de
Internet www.boschrexroth.de

Bosch Rexroth Limited

Cromwell Road, St Neots
Cambs, PE19 2ES
Tel: 0 14 80/22 32 56
Fax: 0 14 80/21 90 52
E-mail: info@boschrexroth.co.uk

The data specified above only serves to describe the product. No statements concerning a certain condition or suitability for a certain application can be derived from our information. It must be remembered that our products are subject to a natural process of wear and ageing.