RE 25 880/02.03
Replaces: 05.02

Material No. 00772703b

Pump safety block
Types DBA... / DBAW

Nominal sizes 32 and 40
Series 1X
Maximum operating pressure 420 bar
Maximum flow 700 L/min

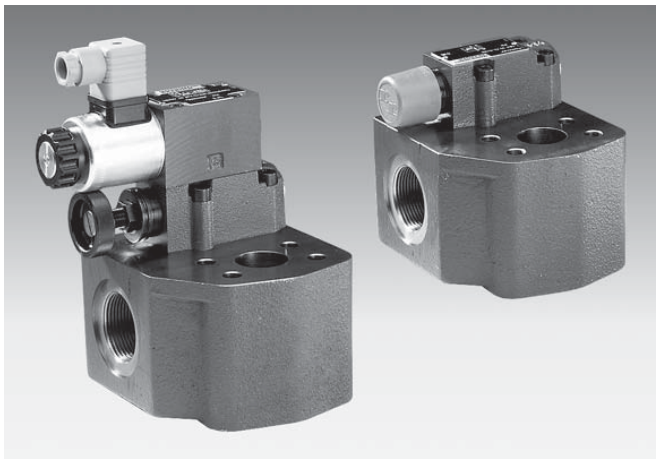

HA5961/98+HA5962/98

Type DBAW 30 BF1N1X/200-6EG24N9K4 with plug-in connector separate order) and type DBA 30 F2N1X/315

Overview of contents

Contents	Page
Features	1
Ordering details	2, 3
Plug-in connectors	2
Preferred types	3
Design tested pressure relief valves	4 to 6
Symbols	6, 7
Function, section	7, 8
Technical data	9, 10
General notes	10
Characteristic curves	11
Unit dimensions	12 to 14
Permissible pressures for flange connections to SAE 7518 C	14
Permissible pumps	15

Features

- Zero pressure start-up and bypass of the pump
- For direct mounting onto the pumps SAE pressure port
- Low bypass pressure due to short paths
- Low compression volume, hence soft switching to low pressure bypass
- Rapid build up of pressure
- 4 adjustment elements:
  - Rotary knob
  - Sleeve with hexagon and protective cap
  - Lockable rotary knob with scale
  - Rotary knob with scale
- 6 pressure stages
- Solenoid operated unloading via a built-on directional valve
- Integrated check valve, optional
- Switching shock damping, optional (only type DBAW...)

- Further information:

  Pilot valves

  Directional spool valves RE 23 178

  Directional poppet valves RE 22 058

Note:

Design tested pressure relief valves to directive 97/23/EG (abbreviated to DGRL in any further text) **types DBA…/ DBAW..E, series 1X see pages 4 to 6.**

Ordering details

DBA								1X/

Without directional valve = **No code**
With built-on directional valve = **W**

Without check valve = **No code**
With check valve = **R** [1]

Nominal size 32 = **30**
Nominal size 40 = **40**

With built-on directional valve, **normally closed** = **A** [2]
With built-on directional valve, **normally open** = **B** [2]

Connection / SAE flange [3]
Standard pressure series (3000 ...5000 PSI) = **F**
High pressure series (6000 PSI) = **H**

Adjustment element
Rotary knob = **1**
Sleeve with hexagon and protectice cap = **2**
Lockable rotary knob with scale = **3** [4]
Rotary knob with scale = **7**

With main spool Ø 24 mm (only possible with version „**H**“ ≙ 420 bar) = **No code**

With main spool Ø 28 mm = **N**

Series 10 to 19 = **1X**
(10 to 19: unchanged installation and connection dimensions)

[1] Only up to 315 bar
[2] Ordering details **only** required for valve with built-on directional valve („DBAW“)
[3] Please take note of the pressure ratings and connection dimensions on page 14!
[4] H-key with Material No. **R900008158** is included within the scope of supply.
[5] Catalogue sheet RE 22 058
[6] Catalogue sheet RE 23 178
[7] Hyphen „–“ is **only** required for the version with built-on directional valve, however without switching shock damping („DBAW…/…S…“) and without „U“.
[8] Plug-in connectors must be ordered separately (see below).
[9] Ordering details **only** required for a valve with built-on directional valve and switching shock damping („DBAW…/…S…“)

Ordering details: plug-in connectors to DIN EN 175 301-803 and ISO 4400 for **component plug"K4"**

Further plug-in connectors see RE 08 006		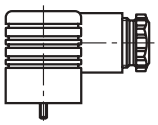	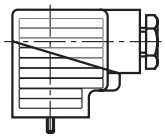		
		Material No.			
Valve side	**Colour**	Without circuitry	With indicator light 12 … 240 V	With rectifier 12 … 240 V	With indicator light and Z-diode protective circuit 24 V
a	Grey	**R900074683**	–	–	–
a	Black	–	**R900057292**	**R900313933**	**R900310995**

												*

Further details in clear text

Design tested

No code = **Without** design testing

E = Safety valve **with** design testing to DGRL 97/23/EG

No code = NBR seals

V = FKM seals

(other seals on request)

⚠ **Attention!** The compatibility of the seals and pressure fluid has to be taken into account!

R12 [9] **=** Orifice Ø 1.2 mm in port B of the directional spool valve

B12 [9] **=** Orifice Ø 1.2 mm in port P of the directional poppet valve

Electrical connections

Individual connection

K4 [2; 8] **=** **Without** plug-in connector, with component plug DIN EN 175 301-803

No code = **Without** hand override

N [2] **=** **With** hand override

N9 [2] **=** **With** protected hand override

G24 [2] **=** 24 V DC

G205 [2] **=** 205 V DC

W230 [2] **=** 230 V AC 50/60 Hz

No code = **Without** directional valve

6E [2] **=** **With** directional spool valve (high performance valve [6] – settable pressure up to 350 bar)

6SM [2] **=** **With** directional poppet valve [5] (compulsory with settable pressures in excess of 350 bar)

No code = **Without** switching shock damping

S = **With** switching shock damping (only type DBAW)

No code = Standard version

U = Valve for minimum opening pressure (**not** suitable for cross-relief function!)

Pilot oil supply and pilot oil drain

– [7] **=** Internal pilot oil supply and pilot oil drain (standard)

Y = Internal pilot oil supply, external pilot oil drain

Settable pressure

50 = Settable pressure up to 50 bar

100 = Settable pressure up to 100 bar

200 = Settable pressure up to 200 bar

315 = Settable pressure up to 315 bar

350 = Settable pressure up to 350 bar

420 = (only version „H“) Settable pressure up to 420 bar

Preferred types (readily available)

Type	Material No.
DBA 30 H2N1X/315	R900918709

Further preferred types and standards components can be found in the EPS (Standard Price List).

Ordering details for design tested pressure relief valves type DBA…/…E, series 1X

Design tested to directive 97/23/EG (pressure components directive)

NS	Designation	Component identification	Max. permissible flow q_{Vmax} in L/min for pilot oil drain External „Y“	Internal „–“	Set response over pressure *p* in bar
32	DBA 30 [2][3] N1X/ [4][5][6] E	TÜV.SV.[ ]–939.22.F.G.p	200	175	30 to 60
	DBAR 30 [2][3] N1X/ [4][5][6] E	TÜV.SV.[ ]–939.22.F.G.p	400	260	61 to 110
	DBAW 30 [1][2][3] N1X/ [4][5] 6 [*] [6] E	TÜV.SV.[ ]–939.22.F.G.p	600	360	111 to 210
	DBAWR 30 [1][2][3] N1X/ [4][5] 6 [*] [6] E	TÜV.SV.[ ]–939.22.F.G.p	700	520	211 to 350
40	DBA 40 [2][3] N1X/ [4][5][6] E	TÜV.SV.[ ]–938.22.F.G.p	350	300	30 to 60
	DBAR 40 [2][3] N1X/ [4][5][6] E	TÜV.SV.[ ]–938.22.F.G.p	450	350	61 to 110
	DBAW 40 [1][2][3] N1X/ [4][5] 6 [*] [6] E	TÜV.SV.[ ]–938.22.F.G.p	550	500	111 to 210
	DBAWR 40 [1][2][3] N1X/ [4][5] 6 [*] [6] E	TÜV.SV.[ ]–938.22.F.G.p	700	600	211 to 350

[1]
- Directional valve, normally closed **= A**
- Directional valve, normally open **= B**

[2]
- Standard pressure series **= F**
- High pressure series **= H**

[3]
- Adjustment element hand wheel **= 1**
  (sealed pressure adjuster, unloading or adjustments in the lower settable range is possible!)
- Adjustment element with sealed protective cap **= 2**
  (no adjustment or unloading is possible)

[4]
- The pressure details contained within the type code are to be entered by the customer e.g. **= 150**
  Pressure adjustments ≥ 30 bar and in 5 bar steps are possible

[5]
- Internal pilot oil supply and pilot oil drain **= –** [1), 2)]
- Recommended: Internal pilot oil supply, external pilot oil drain **= Y** [2)]
  (ordering details to symbols on pages 6 and 7)

[*]
- Electrical data ordering details
  (see page 3) e.g. **= EG24N9K4**

[6]
- NBR seals **= –**
- FKM seals **= V**

[ ] Details are completed by the factory

1) Hyphen „–“ ordering details are **only** required for the version with built-on directional valves („DBAW”), without „U“ and „S“.

2) External pilot oil drain „X“ is **not** possible!

Safety guidelines for design tested safety valve DBA./..E, series 1X in accordance to the pressure component directive DGRL 97/23/EG

- Before ordering a design tested pressure relief valve, checks have to be carried out to ensure that at the required **response pressure *p*** the maximum permissible **flow q_{Vmax}** (= numerical value in the place of „G" within the component identification) of the safety valve is greater than the maximum possible flow from the system. The appropriate regulations must be taken into account!
- **In accordance to DGRL 97/23/EG** the system pressure must not increase, due to the flow, by more than 10% of the set response pressure (see component identification).
  - The maximum permissible flow stated within the component identification must not be exceeded.
  - The return lines from safety valves must vent in a safe mannor. Fluid must **not** be able to gather in a venting system (see the AD2000- A2 information sheet).

☞ **Application notes must be taken into account!**

- The response value stated within the component identification is set in the manufacturing plant with a flow of 2 L/min.
- The maximum permissible flow stated within the component identification is valid for:
  - Pilot oil return **"external"** (= **Y** in the order code) **without back pressure** in the pilot oil return line, the permissible back pressure in the return line (port T) < 15 bar
  - Pilot oil return **"internal"** (= **no code** in the order code).The maximum permissible flow in only permissible **without back pressure** in the return line (port T)

With internal pilot oil return, the system pressure increases with an increase in flow by the value of the back pressure in the return line (portT) (take the AD2000 -A2, information sheet, point 6.3 into account)

To ensure that the system pressure does not increase, due to the flow, by more than 10% of the set response pressure, the permissible flow must be reduced in relation to the back pressure in the return line (port T) (see the following diagram).

- The removal of the seal from a safety valve invalidates the DGRL approval
- The requirements of the pressure component direction and the AD2000-A2 information sheet must be taken into account!

The relationship of the maximum permissible flow q_{Vmax} and the back pressure p_T in the return line with internal pilot oil return

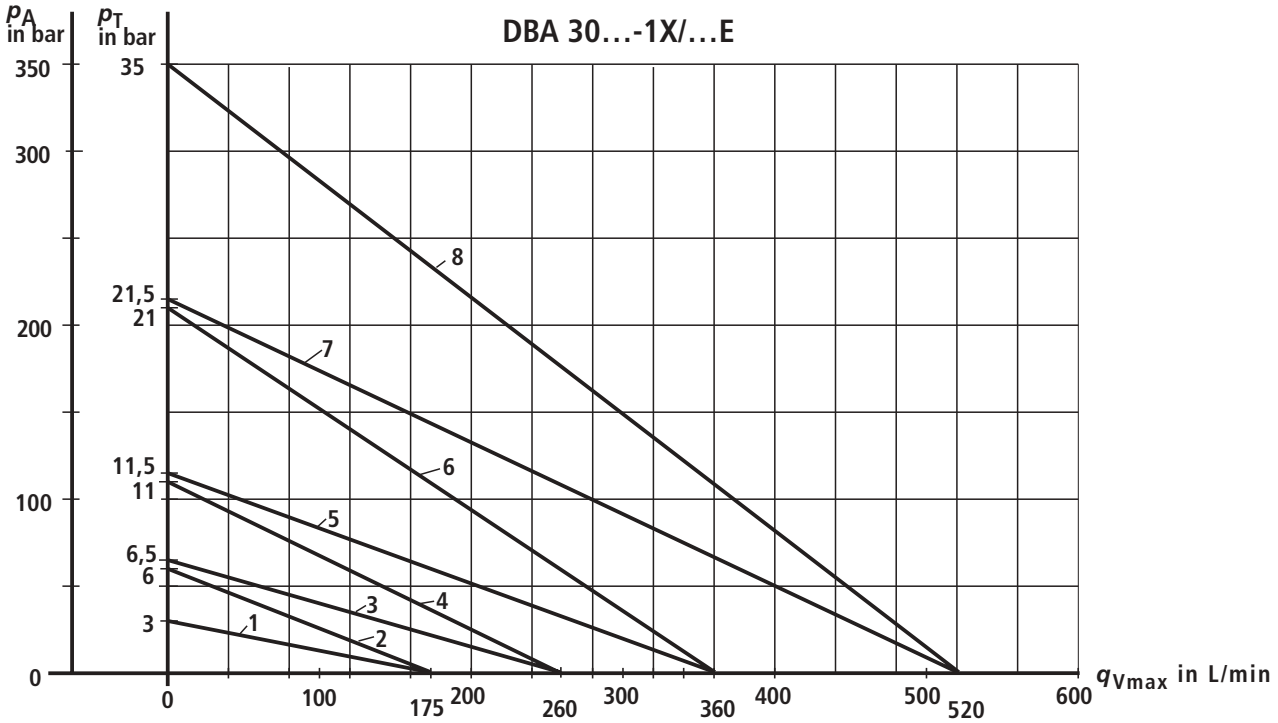

Char. curves	Response pressure p_A in bar
1	30
2	60
3	65
4	110

Char. curves	Response pressure p_A in bar
5	115
6	210
7	215
8	350

For explanation of the diagrams see page 6

Characteristic curves for intermediate values can be obtained by interpolation.

Safety guidelines for design tested pressue safety valves type DBA./..E, series 1X in accordance to the pressure component directive DGRL 97/23/EG

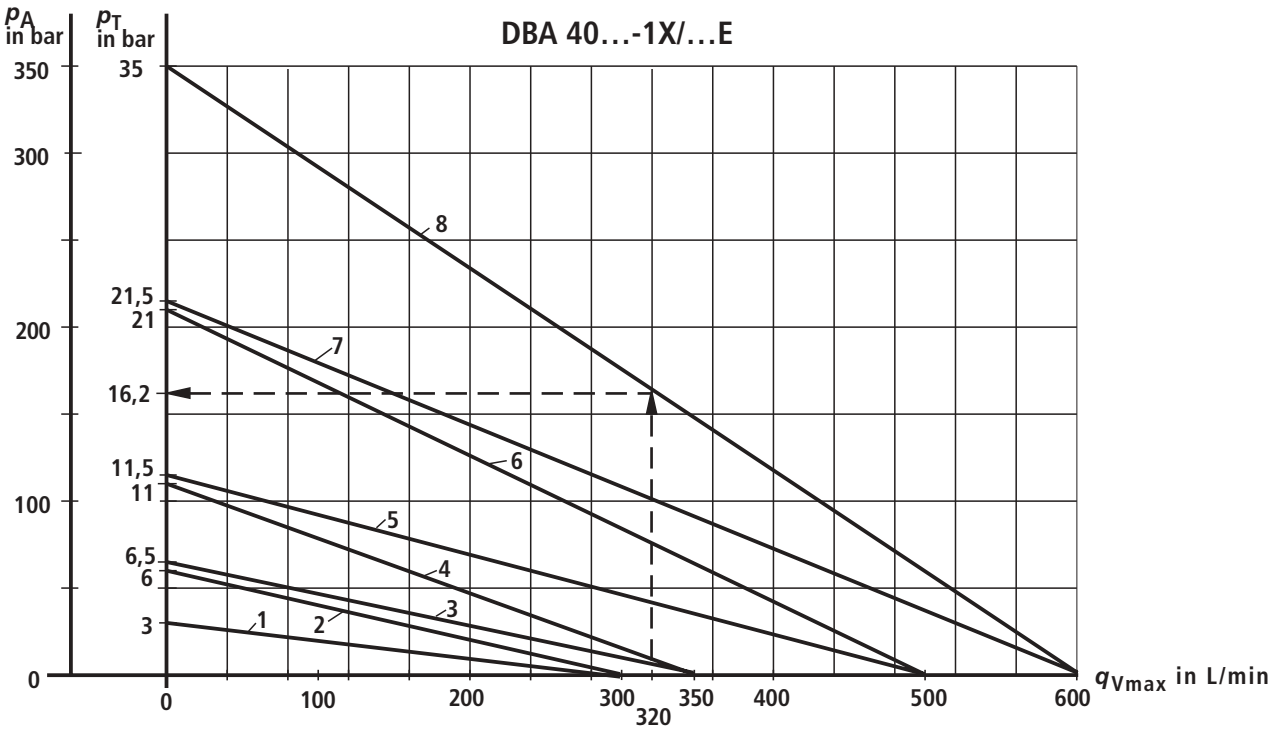

Char. curve	Response pressure p_A in bar
1	30
2	60
3	65
4	110

Char. curve	Response pressure p_A in bar
5	115
6	210
7	215
8	350

The characteristic curves for intermediate values can be obtained by interpolation.

p_A = Response pressure in bar

p_T = Maximum permissibe back pressure in bar (the sum of all possible tank pressures; also see AD2000-leaflet- A2)

$q_{V\,max}$ = Maximum permissible flow in L/min

DGRL: $p_{T\,max}$ = 10 % x p_A (at $q_V = 0$)

Diagram explanation (example: Type DBA... above):

Given: – Flow of the system/the accumulator for which safety has to be provided
q_{Vmax} = 320 L/min
– Safety valve set pressure
p_A = 350 bar

Required: $p_{T\,permissible}$

Solution: See arrows in the above diagram

$p_{T\,permissible}$ (320 L/min ; 350 bar) = 16.2 bar

Symbols

Without check valve		With check valve	
DBA..-1X/..–..	DBA..-1X/..**Y**..	DBAR-1X/..–..	DBAR-1X/..**Y**..

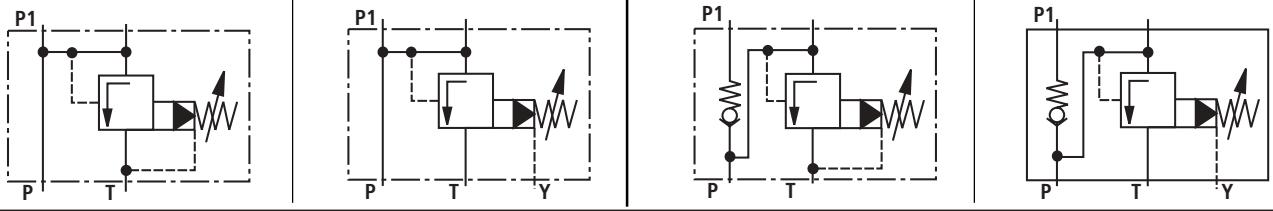

Symbols

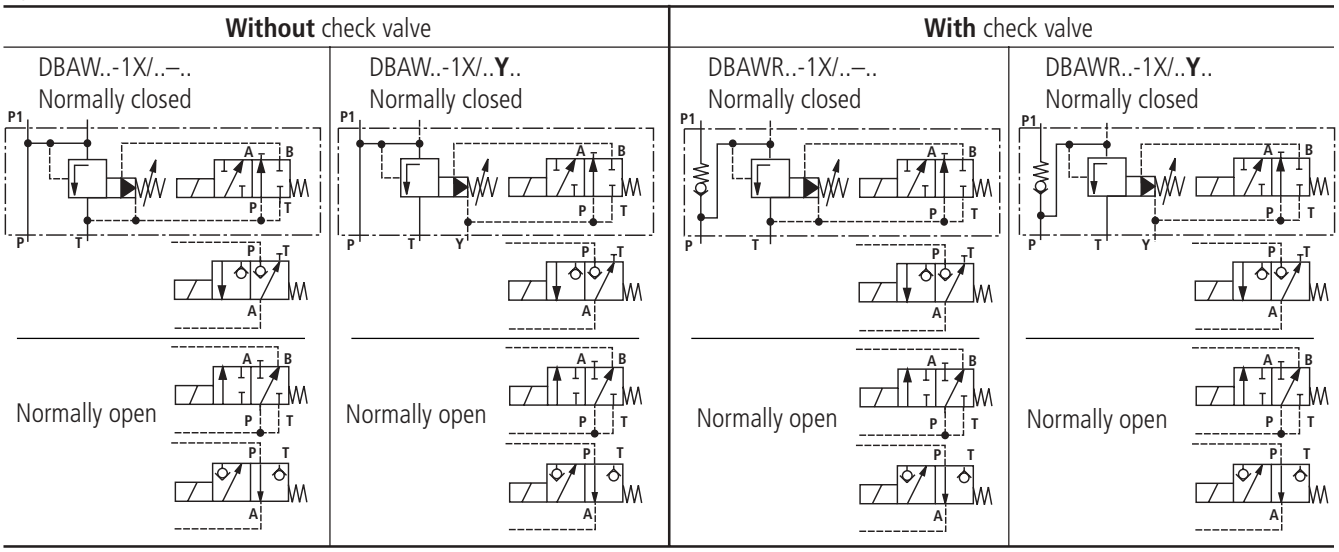

Function, section

Pump safety blocks of types DBA/DBAW are pilot operated pressure relief valves which are integrated into blocks withich can be mounted directly onto the SAE pressure port of pumps.

They are used for the limitation (DBA) or limitation and solenoid actuated unloading (DBAW) of the operating pressure.

Pump safety blocks (DBA) basically comprises of a vlave block (1), main spool insert (3) and pilot valve (2) with pressure adjustment element. The valve housing has a port "P" for the input of pressure fluid and port "P1" for the output. In a branch of the through-bore between these two ports there is the main spool insert. When this is open there is a connection to port "T" (tank line).

Pump safety block type DBA

Pressure in the through-bore acts on the main spool (3). At the same time pressure is applied via the control lines (6) and (7) and via orifices (4) and (5) to the spring-loaded side of the main spool (3) and to the ball (8) in the pilot valve (2). If the pressure in the through-bore exceeds the level set at spring (9), then the ball (8) opens agains the spring (9).

The signal for this is provided internally from the through-bore via control lines (10) and (6). The pressure fluid on the spring loaded side of main spool (3) now flows via the control line (7), orifice drilling (11) and ball (8) into spring chamber (12). From here it is fed, either internally for type DBA...-1X/..-.. via control line (13), or externally for type DBA..-1X/..Y.. via control line (14) to the tank. Orifices (4) and (5) cause a pressure drop to occur at the main spool (3), hence the connection from port P to port T opens. The pressure fluid now flows from port P to port T, whilst the set operating pressure is maintained.

Port (15) can be used for remote control purposes. If a pressure transducer or a pressure gauge isolator valve is to be connected here then version SO616 – without orifice (4) – must be ordered. This prevents delays in the build up of pressure or brief pressure drops when the pressure gauge isolator valve is operated.

Pump safety block type DBAR (with check valve)

The check valve integrated into the housing provides a reduction in the number of components, the required installation space and the length of the fixing screws.

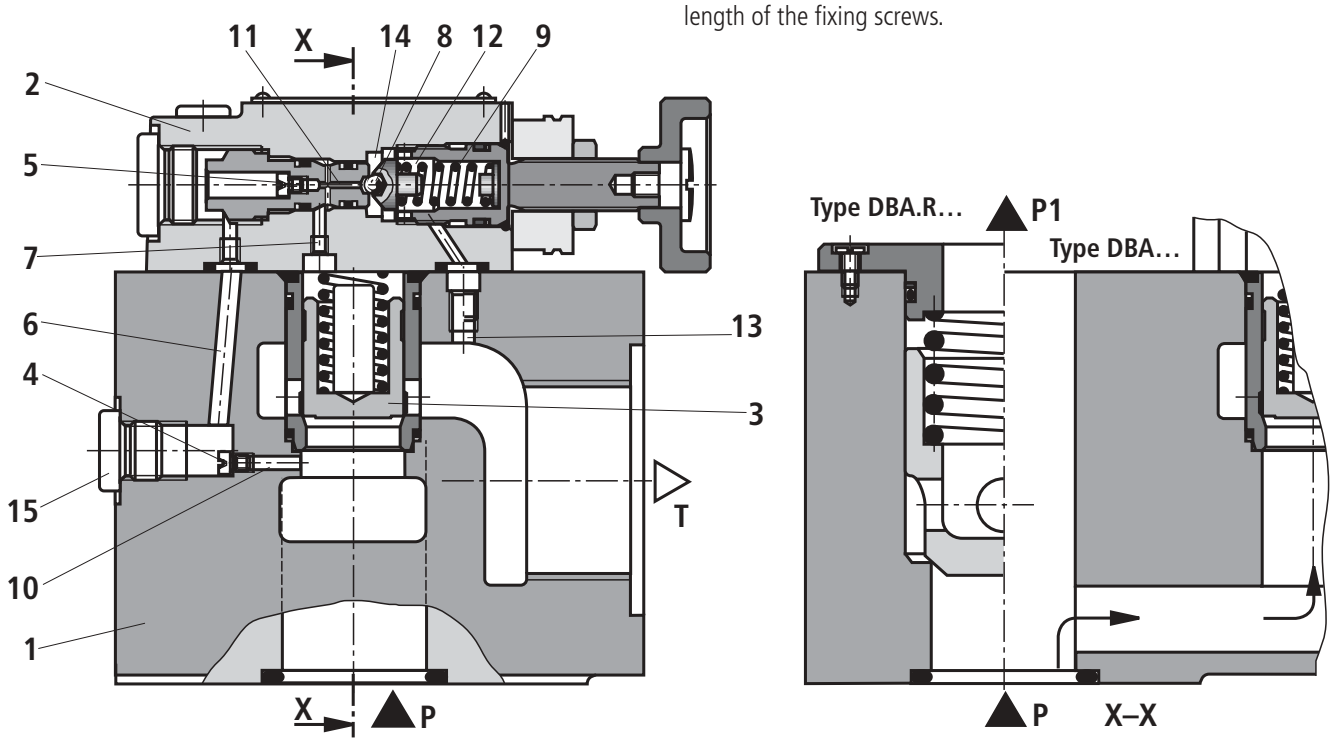

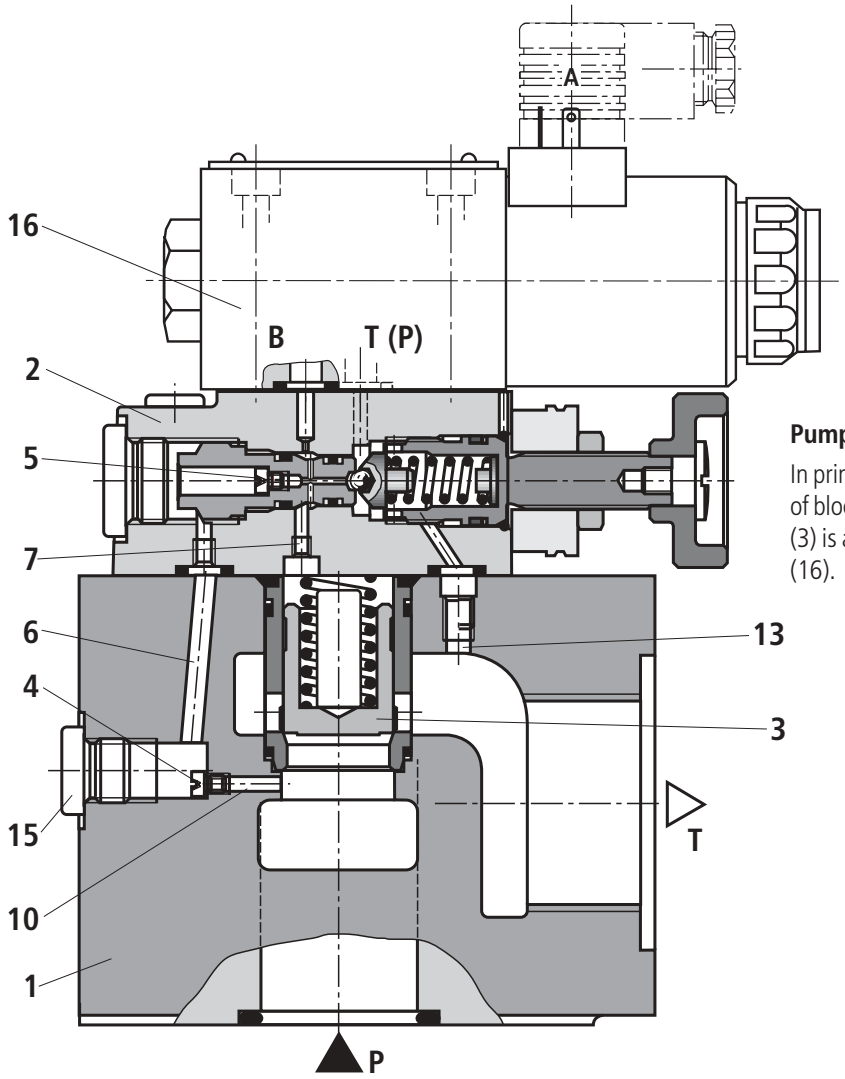

Pump safety block type DBAW...

In principle, the function of this block corresponds to that of block type DBA... However, unloading of the main spool (3) is achieved by actuating the built-on directional valve (16).

Pump safety block with switching shock damping (sandwich plate)
- **Type DBAW.../..S6...R12**
- **Type DBAW.../..S6SM...B12**

The opening of the connection from B2 to B1 or P2 to P1 is delayed by means of the switching shock damping valve (17). Pressure peaks and acousitc decompression shocks in the return line can thus be avoided. This valve is installed between pilot valve (2) and directional valve (16).

The degree of damping (decompression shock) is determined by the size of the orifice (18). As standard, an orifice Ø 1.2 mm is installed (ordering details **..R12..** or **..B12..**).

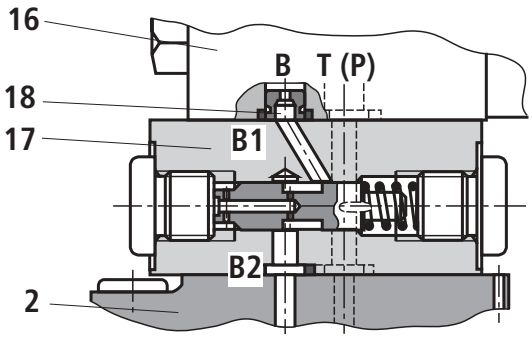

Shown: Directional valve open

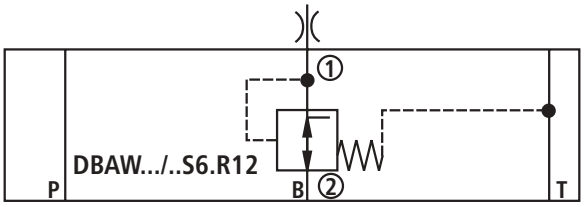

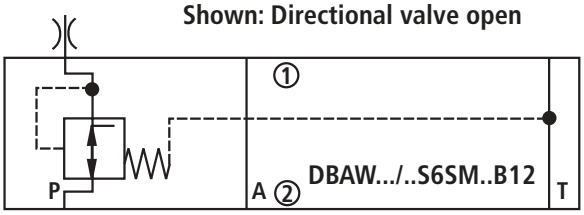

Technical data (for applications outside these parameters, please consult us!)

General

Installation				Optional	
Ambient temperature range	Type DB..		°C	– 30 to + 80 (NBR seals)	
				– 15 to + 80 (FKM seals)	
	Type DBW...		°C	– 30 to + 50 (NBR seals)	
				– 15 to + 50 (FKM seals)	
The minimum housing material strength				Housing materials are to be so selected that adequate safety is ensured for all conceivable operating pressures (e.g. with reference to the compressive strength, thread strength and tightening torques).	
Weight			NS	**32**	**40**
	– Pump safety block	Type DBA…	kg	8	11.4
		Type DBAW…	kg	9.2	12.6
	– Check valve		kg	+ 0.3	+ 0.4
	– Switching shock damping		kg	+ 0.6 (with directional spool valve)	
				+ 0.6 (with directional poppet valve)	
Technical data for the directional spool valve				See catalogue sheet RE 23 178	
Technical data for the directional poppet valve				See catalogue sheet RE 22 058	

Hydraulic

Maximum operating pressure	Port P		bar	420	
	Port T		bar	315	
Opening pressure (for DBAR…)			bar	0.5	
Max. back pressure: Port **Y**		Type DBA..	bar	315	
Port **Y** (DBAW../..Y..) or port T (DBWA.../..–..)			bar	210 for DC solenoids	
				160 for AC solenoids	
Minimum settable pressure			bar	Flow-dependent (see characteristic curves on page 8)	
Maximum settable pressure			bar	50; 100; 200; 315; 350; 420	
Maximum flow			NS	**32**	**40**
	Types DBA / DBAW		L/min	600	650
	Types DBAR / DBAWR		L/min	350	450
Pressure fluid				Mineral oil (HL, HLP) to DIN 51 524 [1]; Fast bio-degradable pressure fluids to VDMA 24 568 (see also RE 90 221); HETG (rape seed oil) [1]; HEPG (polyglycole) [2]; HEES (synthetic ester) [2]; other pressure fluids on request	
Pressure fluid temperature range			°C	– 30 to + 80 (with NBR seals)	
				– 15 to + 80 (with FKM seals)	
Viscosity range			mm^2/s	10 to 800	
ISO code cleanliness class				Maximum permissible degree of contamination of the pressure fluid is to ISO 4406 (C) class 20/18/15 [3]	

[1] Suitable for NBR **and** FKM seals

[2] **Only** suitable for FKM seals

[3] The cleanliness class stated for the components must be adhered too in hydraulcis systems. Effective filtration prevents faults from occurring and at the same time increases the component service life.
For the selection of filters see catalogue sheets RE 50 070, RE 50 076 and RE 50 081.

Deviating technical data for design tested pressure relief valves [1)]

Hydraulic

Maximum back pressure	Port Y	bar	0
	Port T	bar	10
Maximum flow			See table on page 4 and diagrams on pages 5 and 6
Pressure fluid			Mineral oil (HL, HLP) to DIN 51 524 and DIN 51 525
Pressure fluid temperature range		°C	– 20 to + 60 (for NBR seals)
			– 15 to + 60 (for FKM seals)
Viscosity range		mm^2/s	12 to 230

[1)] For applications outside these parameters, please consult us!

General guidelines

- The unloading function (directional valve function with DBWA) must **not** be used for safety functions!
- With type DBAW..**B**..1X/... the lowest settable pressure is set (circulation pressure) if the current fails or if there is a cable break. With type DBAW..**A**..1X/... the pressure relief function is activated if the current fails or if there is a cable break.
- Any hydraulic back pressures in port T with internal pilot oil drain (type DBA/DBAW../..) or port Y with external pilot oil drain (type DBA/DBAW../..Y..) are added 1:1 to the response pressure set at the pilot control of the valve.

Example:

The valve pressure setting resulting from the spring loading (Pos. 9 on page 7) in the pilot control valve/adjustment unit p_{spring} **= 200 bar**

Hydraulic back pressure in port T with internal pilot oil drain $p_{hydraulic}$ **= 50 bar**

=> Response pressure = p_{spring} **+** $p_{hydraulic}$ **= 250 bar**

Characteristic curves (measured with HLP46, ϑ_{oil} = 40 °C ± 5 °C)

The characteristic curves were measured with **external, pilot oil drain, at zero pressure**.
With internal pilot oil drain, the input pressure is increased by the output pressure present at port T.

Input pressure in relation to the flow

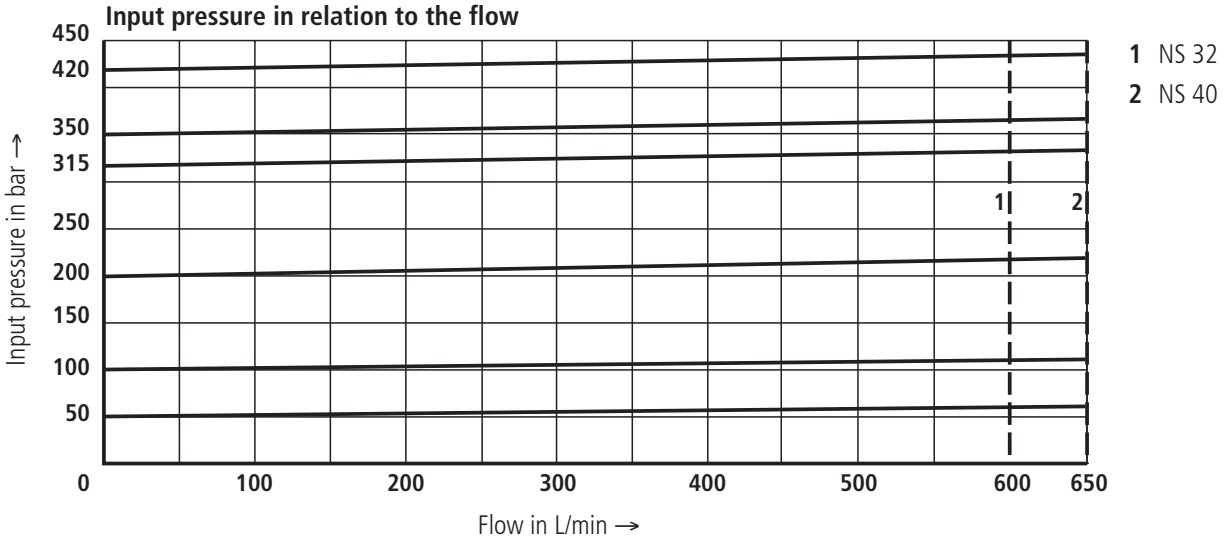

Minimum settable pressure and bypass pressure in relation to the flow

Standard version

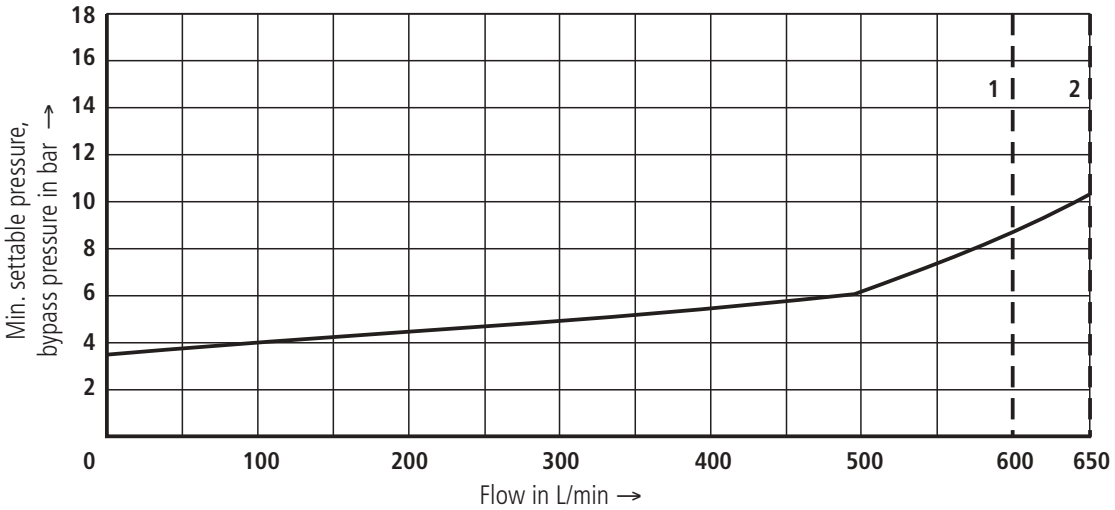

Minimum settable pressure and bypass pressure in relation to the flow

Version "U" (valve for minimum settable pressure)

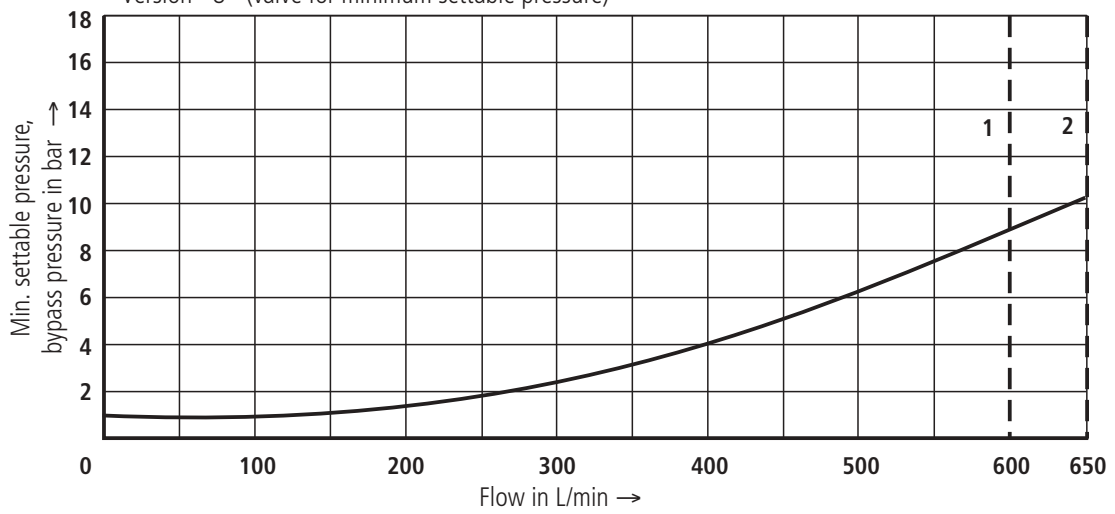

The characteristic curves are valid for an output pressure of p_T = 0 bar over the entire flow range!

Unit dimensions: types DBA…/DBAW…with directional poppet valve (dimensions in mm)

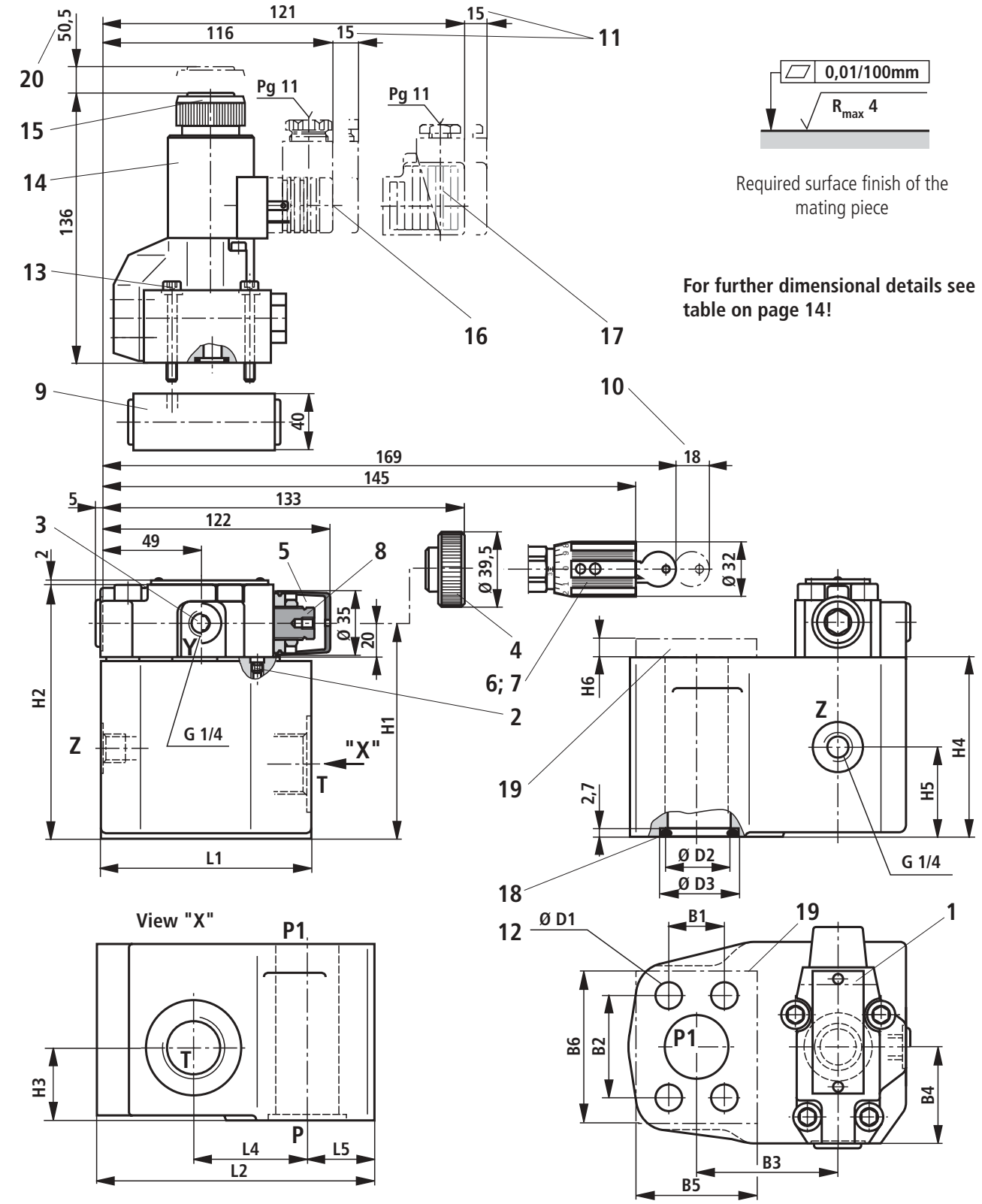

0,01/100mm

R_{max} 4

Required surface finish of the mating piece

For further dimensional details see table on page 14!

1 Name plate
2 Not included with internal pilot oil drain
3 Port Y for external pilot oil drain
4 Adjustment element "**1**"
5 Adjustment element "**2**"
6 Adjustment element "**3**"
7 Adjustment element "**7**"
8 Hexagon 10A/F
9 Switching shock damping valve, optional
10 Space required to remove the key
11 Space required to remove the plug-in connector
12 Block mounting holes
13 Directional poppet valve NS6 (see RE 22 058)
14 Solenoid can be rotated in 90° increments (4 x 90°)
15 Hand override, optional
16 Plug-in connector **without** circuitry [1)]
17 Plug-in connector **with** circuitry [1)]
18 Seal ring
19 Integrated check valve, "R"
20 Space required to remove the coil

[1)] Must be ordered separately, see page 2.

Unit dimensions: types DBA…/DBAW…with directional spool valve (dimensions in mm)

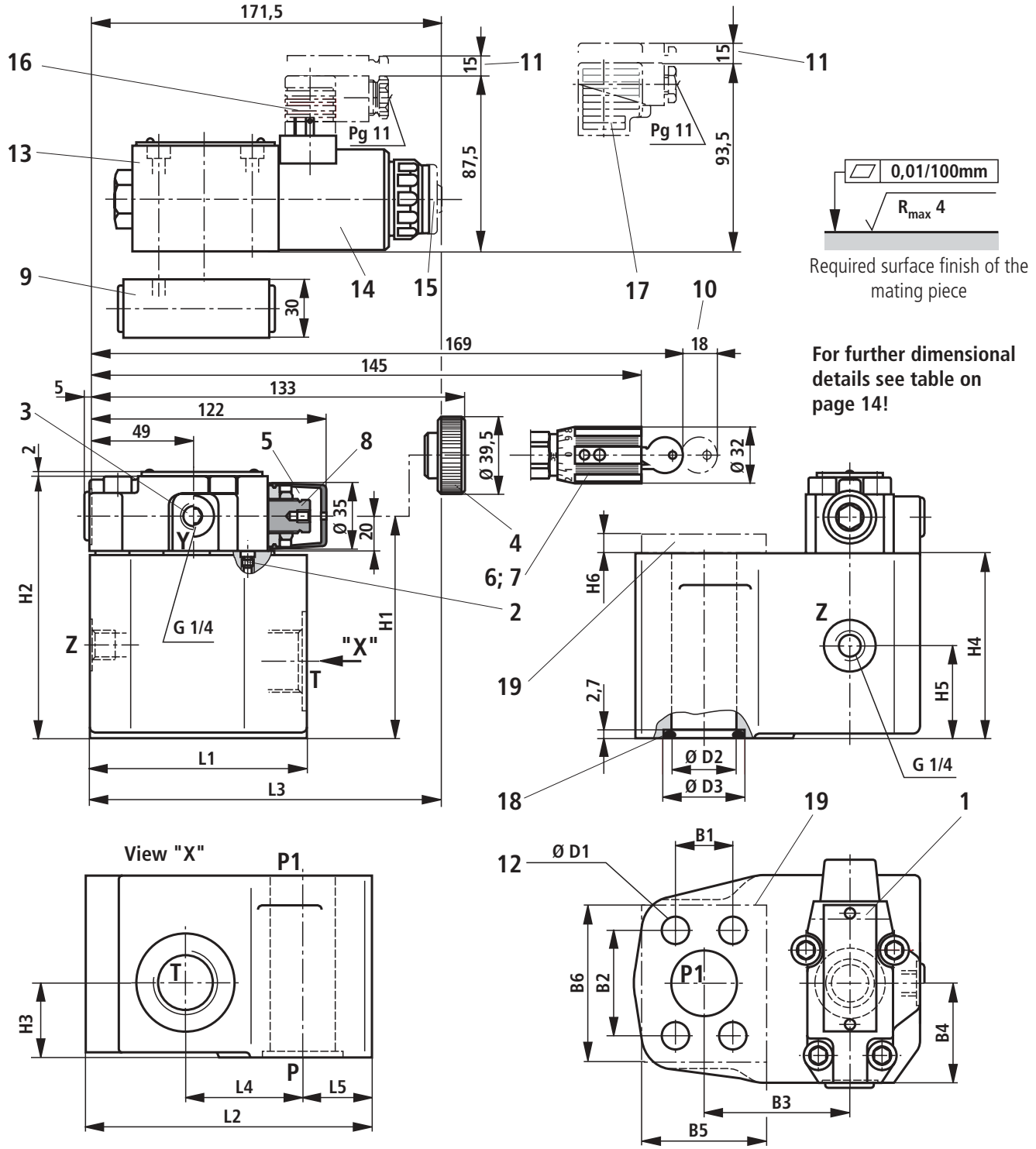

Required surface finish of the mating piece

For further dimensional details see table on page 14!

1 Name plate
2 Not included for internal pilot oil drain
3 Port Y for external pilot oil drain
4 Adjustment element "**1**"
5 Adjustment element "**2**"
6 Adjustment element "**3**"
7 Adjustment element "**7**"
8 Hexagon 10A/F
9 Switching shock damping valve, optional
10 Space required to remove the key
11 Space required to remove the plug-in connector
12 Block mounting holes
13 Directional spool valve NS 6 (see RE 23 178)
14 Solenoid „a"
15 Hand override, optional
16 Plug-in connector **without** circuitry[1)]
17 Plug-in connection **with** circuitry [1)]
18 Seal rings
19 Integrated check valve, version "R"

[1)] Must be ordered separately, see page 2.

Unit dimensions (dimensions in mm)

Standard pressure series type DBA…**F**…

NS	L1	L2	L3	L4	L5	B1	B2	B3	B4	B5 [1]	B6 [1]	H1	H2	H3	H4	H5	H6 [1]	ØD1	ØD2	ØD3
32	121	138	~165	55	38.5	30.2	58.7	65	48.3	60	90	105	125	43	85	43	8	11	32	43.9
40	138	156	~172	54.5	47.5	35.8	69.9	74.5	54.7	65	110	118	138	50	98	56	8	13	38	53.5

High pressure series type DBA…**H**…

NS	L1	L2	L3	L4	L5	B1	B2	B3	B4	B5 [1]	B6 [1]	H1	H2	H3	H4	H5	H6 [1]	ØD1	ØD2	ØD3
32	121	138	~165	55	38.5	31.8	66.7	65	48.3	80	95	105	125	43	85	43	8	15	32	43.9
40	138	156	~172	54.5	47.5	36.6	79.4	74.5	54.7	95	110	118	138	50	98	56	8	17	40	53.5

Standard pressure series type DBA…**F**…

NS	Ports		Fixing screws [2]		Tightening torque
	P and P1	T	DIN 912-10.9	Material No.	M_A in Nm
32	SAE 1 1/4"	G 1 1/4	M10 x 120	R900080047	75
40	SAE 1 1/2"	G 1 1/2	M12 x 140	R900003256	130

High pressure series type DBA…**H**…

NS	Ports		Fixing screws [2]		Tightening torque
	P und P1	T	DIN 912-10.9	Material No.	M_A in Nm
32	SAE 1 1/4"	G 1 1/4	M14 x 125	R900025551	205
40	SAE 1 1/2"	G 1 1/2	M16 x 150	R900006297	310

[1] Only with version "R" (with check valve)

[2] Not included within the scope of supply (separate order)

Permissible pressures for flange connections to SAE 7518 C

Standard pressure series type DBA…**F**…

SAE 1/2"	5000 PSI	350 bar
SAE 3/4"	5000 PSI	350 bar
SAE 1"	5000 PSI	350 bar
SAE 1 1/4"	4000 PSI	280 bar
SAE 1 1/2"	3000 PSI	210 bar

High pressure series type DBA…**H**…

SAE 1/2"	6000 PSI	420 bar
SAE 3/4"	6000 PSI	420 bar
SAE 1"	6000 PSI	420 bar
SAE 1 1/4"	6000 PSI	420 bar
SAE 1 1/2"	6000 PSI	420 bar

Permissible pumps: standard pressure series

Pump safety block		**NS 32**	**NS 40**
Pump type	Port P	SAE 1 1/4"	SAE 1 1/2"
	– **Variable displacement pump** Series 30 to RE 92 711	– A10VSO71	– –
	– **External gear pump** G3, series 3X to RE 10 039	G3-3X/029 G3-3X/032 G3-3X/038	– – –
	G4, series 2X to RE 10 042	G4-2X/040 G4-2X/050 – –	G4-2X/063 G4-2X/070 G4-2X/080 G4-2X/100
	– **Internal gear pump** PGH4, series 2X to RE 10 223	– –	PGH4-2X/080 PGH4-2X/100

Permissible pumps: high pressure series

Pump safety block		**NS 32**	**NS 40**
Pump type	Port P	SAE 1 1/4"	SAE 1 1/2"
	– **Fixed displacement pump** Series 6 to RE 91 401	A2FO125 A2FO160 A2FO180	– – –
	Series 6 to RE 91 470	A7FO108-160	–
	Series 5 to RE 91 015	A2F200 A2F250	A2F355 A2F500
	– **Industrial variable displ. pump** Series 1 to RE 92 050	A4VSO180 A4VSO125	A4VSO355 A4VSO250
	Series 3 to RE 92 002	A4VG125	A4VG250
	– **Variable displacement pump** Series 5.1 to RE 92 210	A7V250 –	A7V355 A7V500
	Series 6 to RE 92 202	A7VO160 A10VSO140	– –
	Series 30 to RE 92 711	A10VSO100 A10VSO140	– –
	Series 5 to RE 92 450	A2V250 –	A2V355 A2V500

Notes

Bosch Rexroth AG
Industrial Hydraulics

D-97813 Lohr am Main
Zum Eisengießer 1 • D-97816 Lohr am Main
Telefon 0 93 52 / 18-0
Telefax 0 93 52 / 18-23 58 • Telex 6 89 418-0
eMail documentation@boschrexroth.de
Internet www.boschrexroth.de

Bosch Rexroth Limited

Cromwell Road, St Neots,
Cambs, PE19 2ES
Tel: 0 14 80/22 32 56
Fax: 0 14 80/21 90 52
E-mail: info@boschrexroth.co.uk