RE 24 755/02.03

Replaces: 12.02

4/2-way isolator valve, pilot operated Type Z4 WEH 10

Nominal size 10

Series 5X

Maximum operating pressure 315 bar

Maximum flow 160 L/min

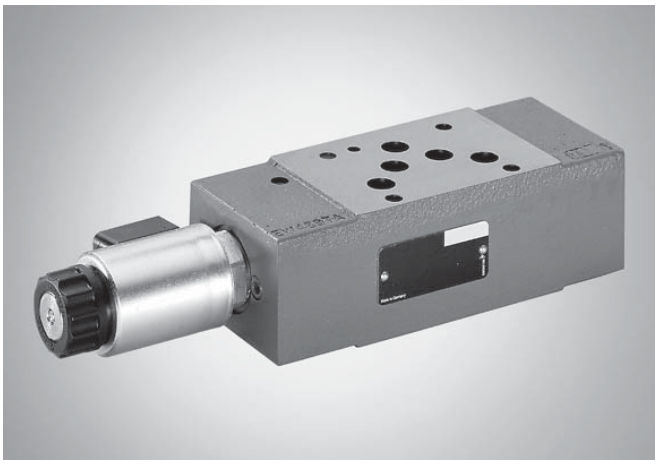

HAD7015/02

Type Z4 WEH .. -5X/4KEG24..ETK4...

Overview of contents

Features

- Pilot operated directional spool valve
- Functions as; an isolating/free-flow valve or as an isolating/free-flow short circuit valve
- P and T have free-flow in all switched positions
- Porting pattern to DIN 24 340 Form A10, ISO 4401 and CETOP-RP121H
- Electro-hydraulic operation
- Wet pin DC solenoids
- Hand override, optional
- Accessories:
  Inductive limit switch on the main spool

Ordering details

Z4	WEH	10	–5X/4K	E	G24		ET				*

Electro-hydraulic

Nominal size 10 **= 10**

For symbols see below

Series 50 to 59 **= 5X**
50 to 59: unchanged installation and connection dimensions)

Pilot cartridge valve LS1364 **= 4K**

Wet pin solenoid with removable coil **= E**

DC solenoids **= G24**

Without hand override **= No code**
With protected hand override **= N9**

Internal pilot oil supply, internal pilot oil drain (standard version) **= ET**

[1] Plug-in connectors must be separately ordered, see page 3

Further details in clear text

No code = NBR seals

V = FKM seals

⚠ Attention!
The compatibility of the seals and pressure fluid has to be taken into account!

QMBG24/ =
QMAG24/ =] Accessories Inductive limit switch, see page 6

Electrical connections

K4[1] **=** **Without** plug-in connector with component plug DIN EN 175 301-803

C4 = Coil Juniortimer (on request)
For further versions see catalogue sheet RE 08 006

Symbols (① = component side, ② = subplate side)

Spool type/ ordering details	**X =** internal **Y =** internal Z4 WEH 10…/..**ET**..
D24	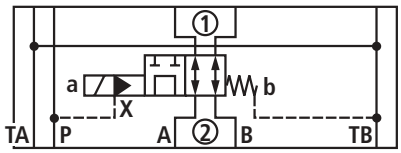
E51	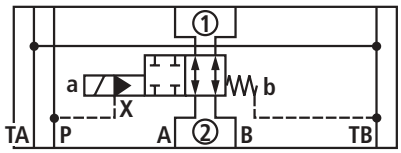
E63	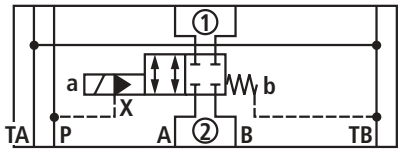
E68	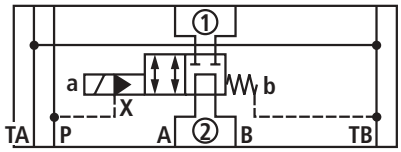

Plug-in connectors to DIN EN 175 301-803 and ISO 4400 for component plug "K4"

For further plug-in connectors see RE 08 006	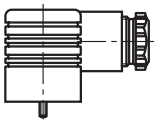	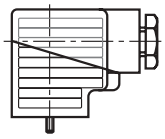		
	Material No.			
	Without circuitry	With indicator light 12 … 240 V	With rectifier 12 … 240 V	With indicator light and Z-diode protective circuit 24 V
	R900074683	**R900057292**	**R900313933**	**R900310995**

Section: type Z4 WEH 10 E68-5X/4KE...

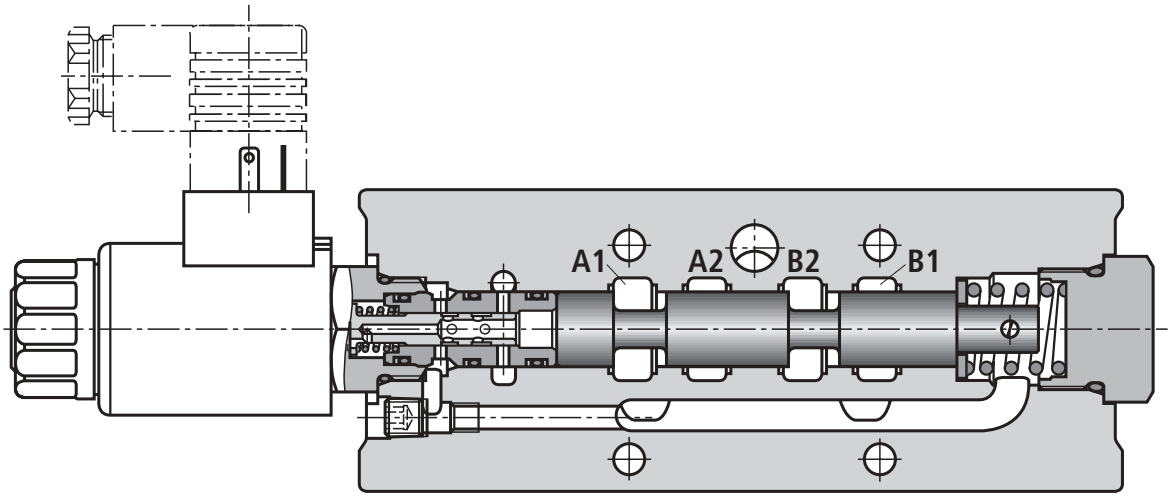

Technical data (for applications outside these parameters, please consult us!)

General

Installation			Optional
Ambient temperature range		°C	– 30 to + 50 (NBR seals)
			– 20 to + 50 (FKM seals)
Weight		kg	3.6
Hydraulic (measured with HLP 46, ϑ_{oil} = 40 °C ± 5 °C)			
Maximum operating pressure	Ports A, B, P	bar	315
	Port T	bar	160
Minimum operating pressure	Port P	bar	15
Maximum flow		L/min	160
Only internal pilot oil supply and drain is possible			
Pressure fluid			Mineral oil (HL, HLP) to DIN 51 524 [1]; Fast bio-degradable pressure fluids to VDMA 24 568 (also see RE 90 221); HETG (rape seed oil) [1]; HEPG (polyglycols) [2]; HEES (synthetic ester) [2]; Other pressure fluids on request
Pressure fluid temperature range		°C	– 30 to + 80 (NBR seals)
			– 20 to + 80 (FKM seals)
Viscosity range		mm^2/s	2.8 to 500
Cleanliness class to ISO code			Maximum permissible degree of contamination of the pressure fluid is to ISO 4406 (C) class 20/18/15 [3]
Protection to ISO 6403	ON	ms	25 - 40
	OFF (switch off with spring)	ms	15 - 30

[1] Suitable for NBR **and** FKM seals

[2] **Only** suitable for FKM seals

[3] The cleanliness class stated for the components must be adhered too in hydraulic systems. Effective filtration prevents faults from occurring and at the same time increases the component service life.
For the selection of filters see catalogue sheets RE 50 070, RE 50076 and RE 50 081.

Characteristic curves (measured with HLP 46, ϑ_{oil} = 40 °C ± 5 °C)

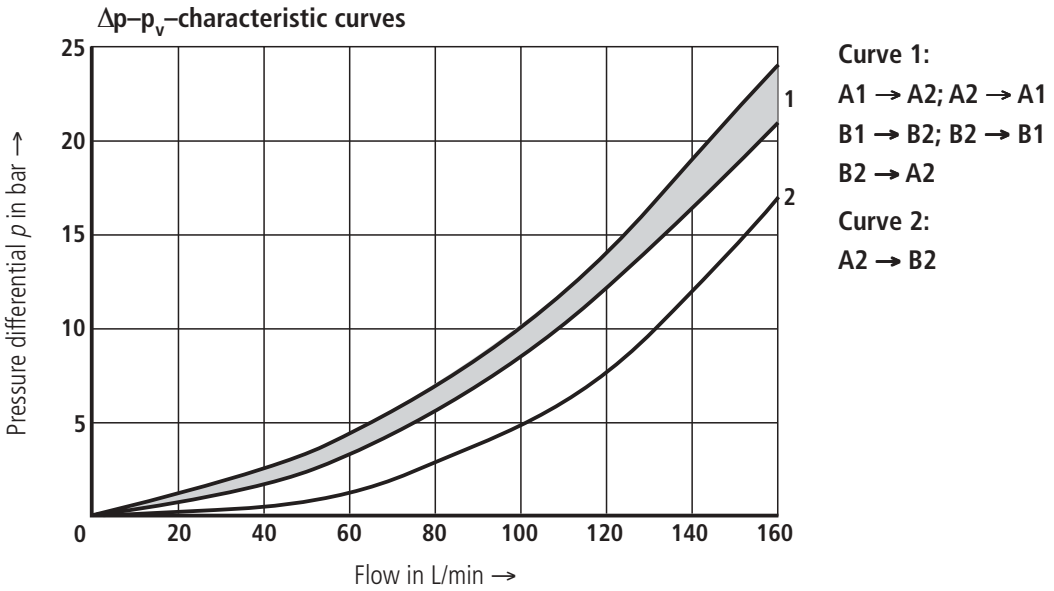

Unit dimensions (① = component side, ② = subplate side – dimensions in mm)

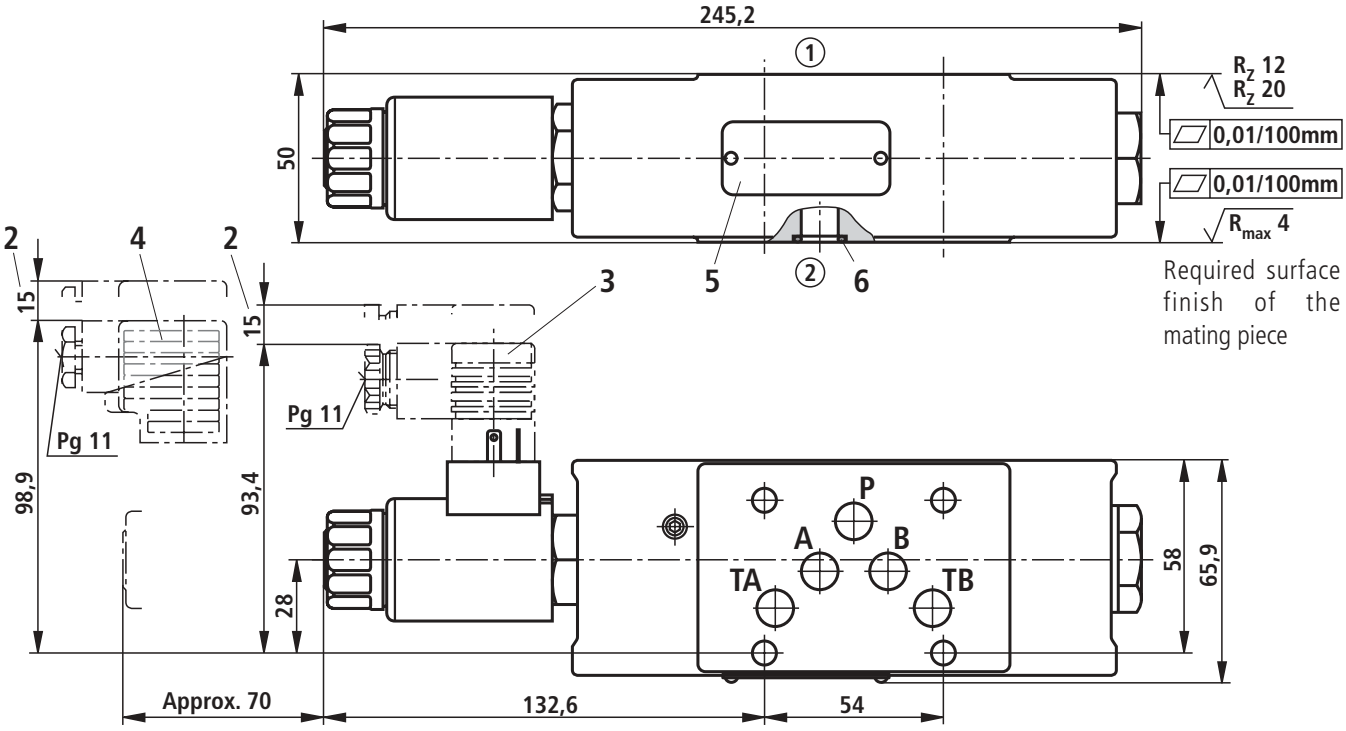

1 Space required to remove the coil
2 Space required to remove the plug-in connector
3 Plug-in connector **without** circuitry [1)]
4 Plug-in connector **with** circuitry [1)]
5 Name plate
6 Identical seal rings for ports A, B, P, TA and TB

Inductive limit switch, mounting possibilities (dimensions in mm)

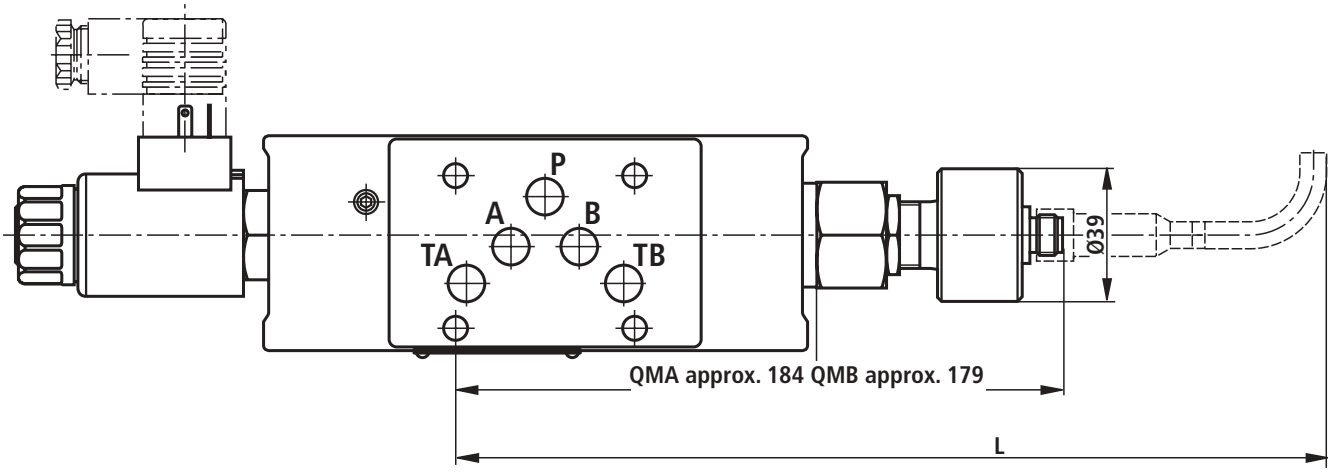

Maximum operating pressure in bar	
Ports A, P, B	Port T
315	210 (=) 160 (~)

Monitored switched position	Ordering details	Installation possiblitiy
"a"	**QMAG24**	Only possible with valves with one solenoid – The limit switch is mounted on the opposite end.
"b"	**QMBG24**	

Dim. L (with plug-in connector, 10 mm withdrawal length and the minimum bend radius for the connection cable).

	L	
Straight plug-in connector **Material No. R900031155**	287 282	QMA QMB
Angled plug-in connector **Material No. R900082899**	218 213	QMA QMB
Plug-in connector with moulded in cable **Material No. R900064381**	257 252	QMA QMB

For plug-in connectors see page 6.

Inductive limit switch, electrical connection

The electrical connection is via a 4-pin plug-in connector with a M12 x 1 connection thread.

The plug-in connector must be ordered separately (see below).

Operating voltage: 24 V DC $^{+20\,\%}_{-10\,\%}$ (residual ripple ≤ 10%)

Power consumption: Max. 40 mA

Outputs: Pulse switching, load between the output and 0 V

Loading capacity of the outputs: Max. 400 mA

Contact allocation:
1: +24V
2: Switch output X1:
The switch output X1 is opened during damping (high resistance condition) and closed when the damping is deactivated (low resistance condition)
3: 0 V
4: Switch output X2:
The switch output X2 is closed during damping (low resistance condition) and opened with the damping is deactivated (high resistance condition)

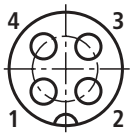

Plug contact on the limit switch

The limit switch does not have an earth connection!

According to the switched position to be monitored the switching outputs X1 and X2 have the following functions:

Actuator on connection side	Monitored switched position	Limit switch damped	Limit switch un-damped	Switch output X1	Switch output X2
"b"	QMA	X		N/C	N/O
	QMB		X	N/O	N/C

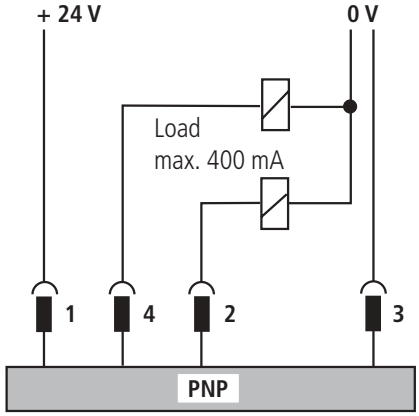

The inductive limit switch type QM may be connected as a normally open or normally closed contact.

Plug-in connector suitable for K24 4-pin, M12 x 1 with screw connection, cable conduit fitting connection Pg 9.

Material No. R900031155

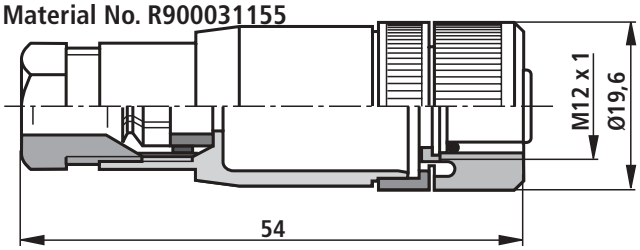

Plug-in connector suitable for K24-3m 4-pin, M12 x 1 with moulded PVC cable, 3m long.

Wire cross-section: 4 x 0.34 mm^2

Core marking:
1: Brown
2: White
3: Blue
4: Black

Material No. R900064381

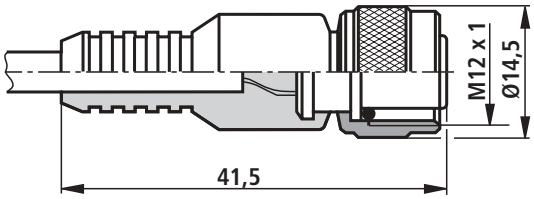

Plug-in connector suitable for K24 4-pin, M12 x 1 with screw connection, cable conduit fitted connection Pg 9, angled.

Housing with relation to the contact set can be rotated through 4 x 90°.

Material No. R900082899

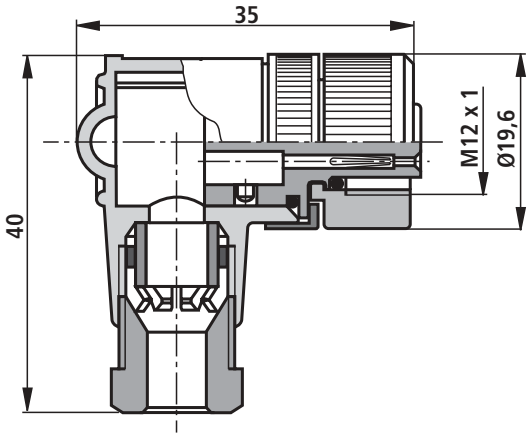

Notes

Notes

Bosch Rexroth AG
Industrial Hydraulics

D-97813 Lohr am Main
Zum Eisengießer 1 • D-97816 Lohr am Main
Telefon 0 93 52 / 18-0
Telefax 0 93 52 / 18-23 58 • Telex 6 89 418-0
eMail documentation@boschrexroth.de
Internet www.boschrexroth.de

Bosch Rexroth Limited

Cromwell Road, St Neots,
Cambs, PE19 2ES
Tel: 0 14 80/22 32 56
Fax: 0 14 80/21 90 52
eMail: info@boschrexroth.co.uk