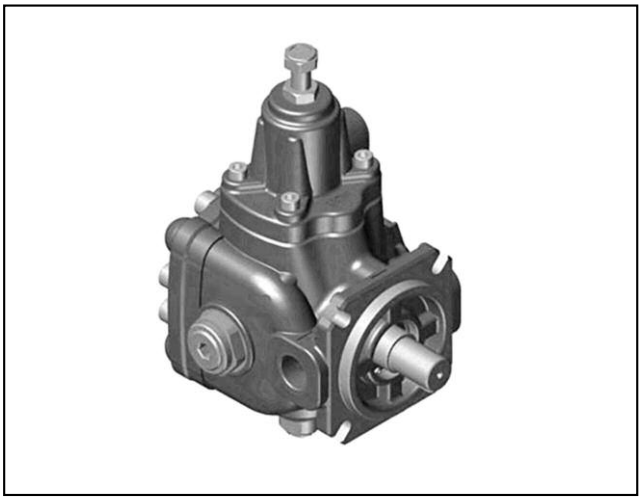

# RV1D

## VARIABLE DISPLACEMENT VANE PUMPS WITH DIRECT PRESSURE ADJUSTER

### SERIES 10

### OPERATING PRINCIPLE

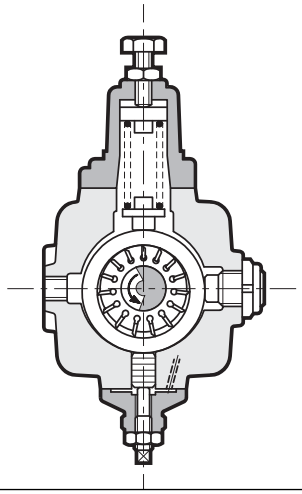

— The RV1D pumps are variable displacement vane pumps with mechanical pressure compensator.

— The pressure compensator keeps the cam ring of the pumping group in the eccentric position with use of an adjustable load spring. When the delivery pressure equals the pressure corresponding to the spring setting, the cam ring is moved toward the center instantaneously, adjusting the flow rate to the values required by the plant.

— Energy consumption is reduced and adequate in every phase of the cycle.

— The pump group has hydrostatic axial compensation distribution plates, that improve the volumetric efficiency and reduce wear of the components.

— In zero flow demand conditions, the pump delivers fluid only to compensate any possible leaks and pilot lines, keeping constant the circuit pressure .

— The compensator response times are very low such as to make unnecessary the pressure relief valve.

### PERFORMANCE RATINGS (measured with mineral oil with viscosity of 46 cSt at 40°C)

| PUMP SIZE | | 016 | 020 | 025 | 032 | 040 | 050 | 063 |
|---|---|---|---|---|---|---|---|---|
| Geometric displacement (UNI ISO 3662) | $cm^3$/rev | 16 | 20 | 25 | 32 | 40 | 50 | 63 |
| Actual displacement (±3%) | $cm^3$/rev | 17.9 | 22,5 | 28 | 33.4 | 43 | 51 | 63 |
| Maximum flow at 1500 rpm | l/min | 26.8 | 33.7 | 42 | 50.1 | 64.5 | 76.5 | 94.5 |
| Max working pressure | bar | 120 | 100 | | | 100 | | |
| Pressure adjustment range | bar | 20 ÷ 120 | 30 ÷ 100 | | | 30 ÷ 100 | | |
| Maximum drain port pressure allowed | bar | 1 | | | | | | |
| Rotation speed range | rpm | 800 ÷ 1800 | | | | 800 ÷ 1500 | | |
| Rotation direction | | clockwise (seen from the shaft side) | | | | | | |
| Shaft loads | | radial and axial loads are not allowed | | | | | | |
| Max applicable torque on shaft: type R55<br>type R97 | Nm | 110<br>70 | 250<br>- | | | 586<br>- | | |
| Mass | kg | 7.4 | 18.3 | | | 43.8 | | |

| | | |
|---|---|---|
| Ambient temperature range | °C | -20 / +50 |
| Fluid temperature range | °C | +15 / +60 |
| Recommended viscosity | cSt | 22 ÷ 68 |
| Fluid viscosity range | see paragraph 2.2 | |
| Degree of fluid contamination | see paragraph 2.3 | |

### HYDRAULIC SYMBOL

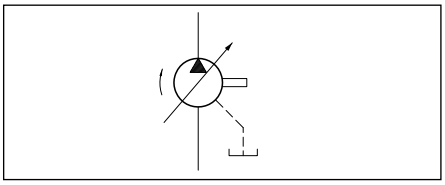

## 1 - IDENTIFICATION CODE

| RV1D | - | | PC | - | R | | | | / | 10 | | |
|---|---|---|---|---|---|---|---|---|---|---|---|---|

Variable displacement vane pump

Pump size:
group 05
**016** = 17,9 $cm^3$/rev
group 1
**020** = 22,5 $cm^3$/rev
**025** = 28 $cm^3$/rev
**032** = 33,4 $cm^3$/rev
group 2
**040** = 43 $cm^3$/rev
**050** = 51 $cm^3$/rev
**063** = 63 $cm^3$/rev

With mechanical pressure control

Rotation direction (seen from the shaft end)

Mounting flange:
**5** = four-bolt mounting flange ISO 3019/2
**9** = four-holes - rectangular - type GR2 (available for RV1D-016 only)

Shaft end:
**5** = cylindrical keyed ISO 3019/2 (not available with flange type 9)
**7** = conical keyed (not available for RV1D-016)

Hydraulic connection:
RV1D-016, 020, 025 and 032:
**B** = BSP threaded ports

RV1D-040, 050 and 063:
**S** = suction / delivery SAE flanges with metric bolts; drain port BSP threaded

Series No.
(from 10 to 19 sizes and mounting dimensions remain unchanged)

Seals:
**N** = NBR seals for mineral oils (**standard**)
**V** = viton for special fluids

Option: Combined pumps.
Omit for single pump
See at par. 12

## 2 - HYDRAULIC FLUID

### 2.1 - Fluid type

Use mineral oil based hydraulic fluids with anti-foam and antioxidant additives. For use of other types of fluid, keep in mind the limitations shown in the following table or consult our technical department for approval.

| FLUID TYPE | NOTES |
|---|---|
| HFC<br>(water glycol solutions<br>with proportion of water ≤ 40%) | -The values shown in the performance ratings table must be reduced by at least 50%<br>- The pump rotation speed must be limited to 1000 rpm.<br>- Use NBR seals only |
| HFD<br>(phosphate esters) | There are no particular limitations with this kinds of fluids. Operation with a fluid viscosity as close as possible to the optimum viscosity range specified in par. 2.2 is recommended.<br>- Use FPM (Viton) seals only |

### 2.2 - Fluid viscosity

The operating fluid viscosity must be within the following range:

| | | |
|---|---|---|
| optimum viscosity | 22 ÷ 68 cSt | referred to the fluid working temperature in the tank |
| maximum viscosity | 400 cSt | limited to only the start-up phase of the pump |

When selecting the fluid type, be sure that the true viscosity is within the range specified above at the operating temperature.

### 2.3 - Degree of fluid contamination

The maximum degree of fluid contamination must be according to ISO 4406:1999 class 20/18/15; therefore, use of a filter with $\beta_{20}$ ≥75 is recommended. A degree of maximum fluid contamination according to ISO 4406:1999 class 18/16/13 is recommended for optimum endurance of the pump. Hence, use of a filter with $\beta_{10}$ ≥100 is recommended.

The suction filter must be equipped with a by-pass valve and, if possible, with a clogging indicator. See intallation section for details.

## 3 - CHARACTERISTIC CURVES RV1D-016 (GR. 05)

(obtained with viscosity of 46 cSt at 40°C)

### FLOW RATE - PRESSURE - ABSORBED POWER

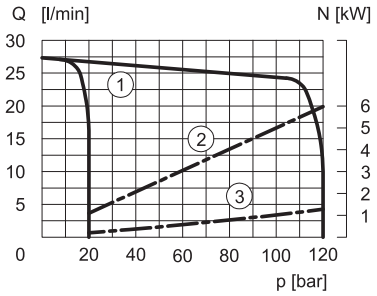


**1)** Flow rate - pressure curves, measured at 1500 rpm
**2)** Absorbed power at the maximum flow rate
**3)** Absorbed power at zero flow rate

### DRAINAGE FLOW RATE

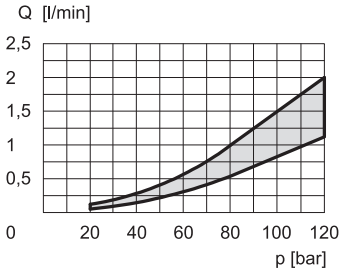


### NOISE LEVEL

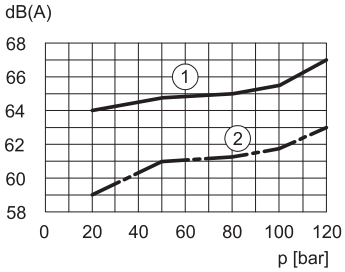


Approximate maximum values of noise level to minimum and maximum flow rate measured with the sound-level meter placed at one meter from pump coupling with flexible coupling.

**1)** noise at max flow
**2)** noise with zero flow

## 4 - CHARACTERISTIC CURVES OF RV1D-020, RV1D-025 AND RV1D-032 (GR. 1)

(obtained with viscosity of 46 cSt at 40°C)

### FLOW RATE - PRESSURE - ABSORBED POWER

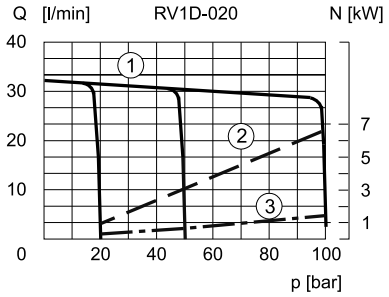


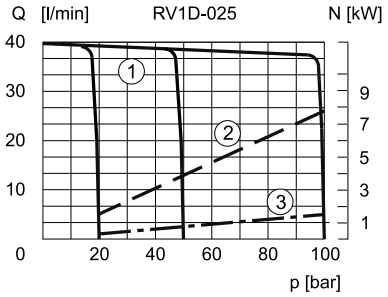


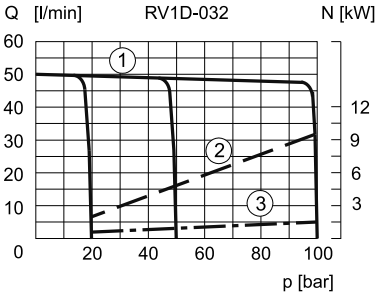


**1)** Flow rate - pressure curves, measured at 1500 rpm
**2)** Absorbed power at the maximum flow rate
**3)** Absorbed power at zero flow rate

### DRAINAGE FLOW RATE

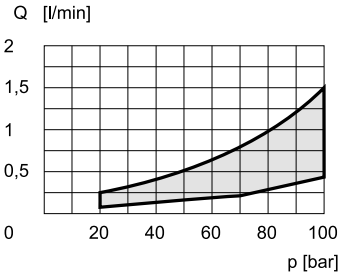


### NOISE LEVEL

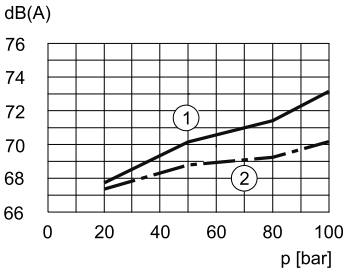


Approximate maximum values of noise level to minimum and maximum flow rate measured with the sound-level meter placed at one meter from pump coupling with flexible coupling.

**1)** noise at max flow
**2)** noise with zero flow

## 5 - CHARACTERISTIC CURVES FOR RV1D-040, RV1D-050 AND RV1D-063 (GR. 2)

(values obtained with mineral oil with viscosity of 46 cSt at 40°C)

**FLOW RATE - PRESSURE - ABSORBED POWER**

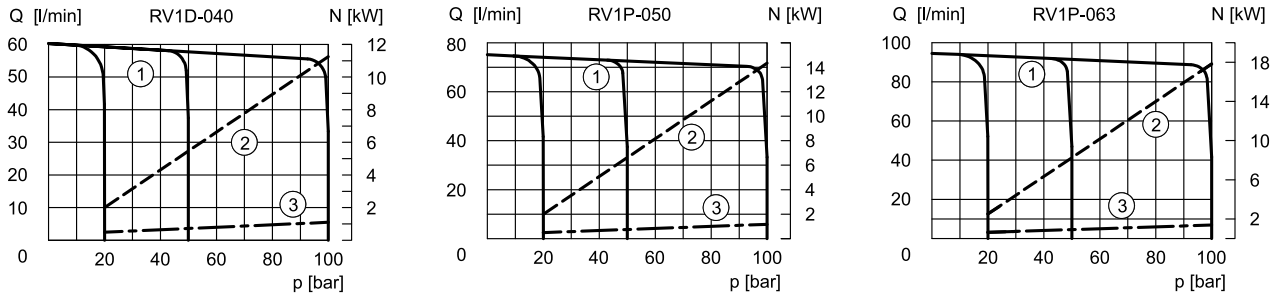


**1)** Flow rate - pressure curves, measured at 1500 rpm
**2)** Absorbed power at the maximum flow rate
**3)** Absorbed power at zero flow rate

**DRAINAGE FLOW RATE**

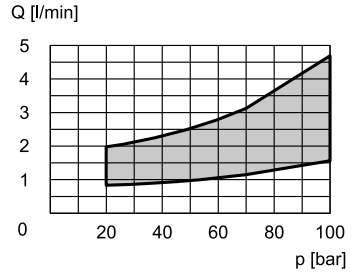


**NOISE LEVEL**

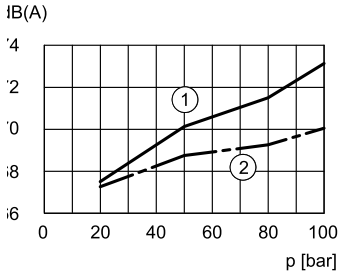


Approximate maximum values of noise level to minimum and maximum flow rate measured with the sound-level meter placed at one meter from pump coupling with flexible coupling.

**1)** noise at max flow
**2)** noise with zero flow

## 6 - VOLUME ADJUSTMENT SCREW

The volume adjuster is fitted as standard on all the pumps.

It consists of an adjustment screw and a small balanced piston that limit the maximum eccentricity of the pumping group cam ring, changing the displacement. The maximum flow is reduced by turning the adjustment screw clockwise. Indicative data, sensitive to performance tolerances.

| **Nominal size** | | **016** | **020** | **025** | **032** | **040** | **050** | **063** |
|---|---|---|---|---|---|---|---|---|
| Reduction of displacement per turn | $cm^3$ | 9,7 | 10 | | | 16 | | |
| Minimum possible displacement | $cm^3$/rev | 3,1 | 9,5 | 15 | 19 | 27,5 | 35,5 | 43,5 |

Tools required for adjustment:

RV1D-016: adjustment screw hexagon socket key 5. Locking nut spanner 17.
Other sizes: adjustment screw hexagon socket key 6. Tooth retainer KM1 type.

## 7 - OVERALL AND MOUNTING DIMENSIONS RV1D-016 (GR. 05)

dimensions in mm

**RV1D-016PC-R97B**

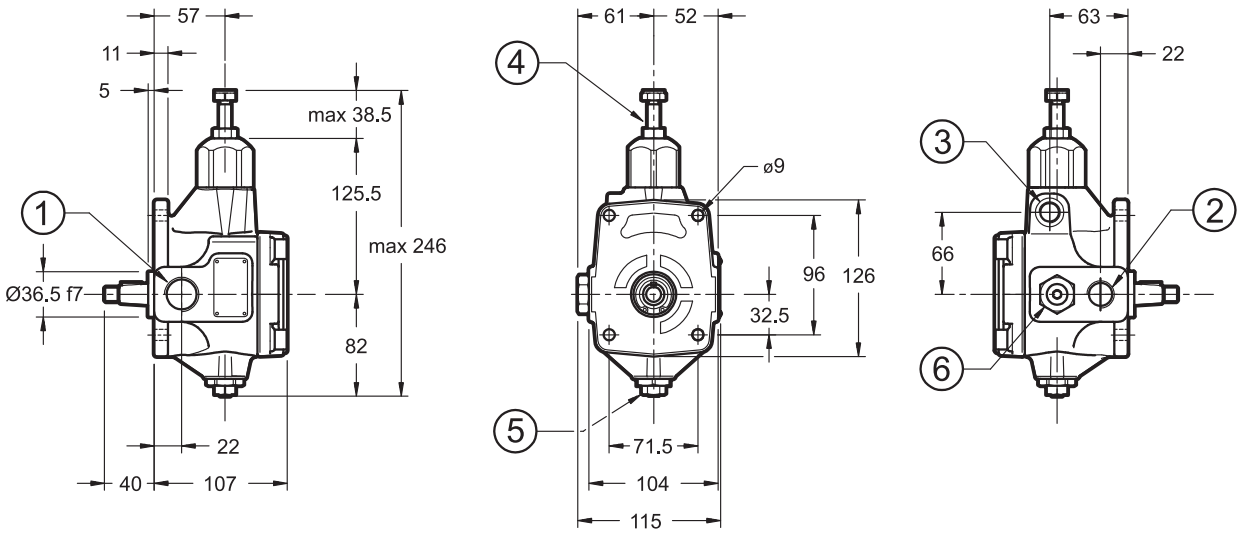


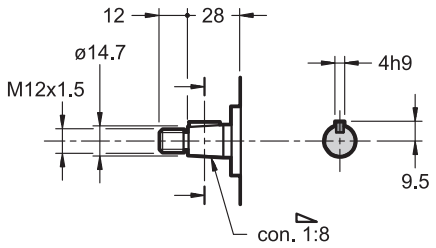


**RV1D-016PC-R55B**

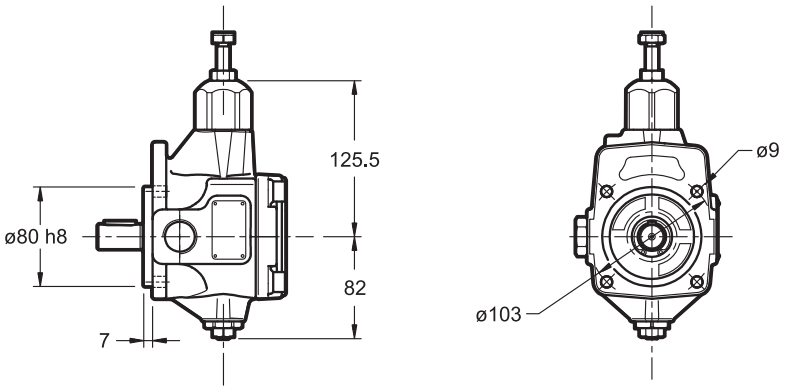


for non quoted dimensions
refer to the drawing
RV1D-016PC-R97B

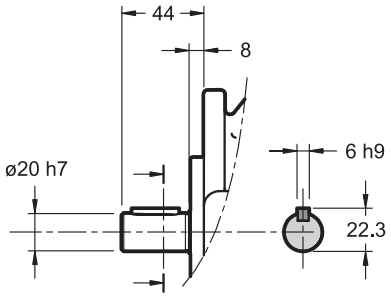


| | |
|---|---|
| 1 | Suction port: 3/4” BSP |
| 2 | Delivery port: 1/2” BSP |
| 3 | Drainage port: 3/8” BSP |
| 4 | Pressure adjustment screw. Rotate clockwise to increase pressure. Spanner 17. Locking nut : spanner 17. |
| 5 | Flow adjustment screw. Rotate clockwise to decrease flow. socket hex screw, hex key 5.Locking nut: spanner 17. |
| 6 | Guide block balancing adjustment screw. **Do not tamper.** |

## 8 - OVERALL AND MOUNTING DIMENSIONS RV1D-020, RV1D-025 AND RV1D-032 (GR.1)

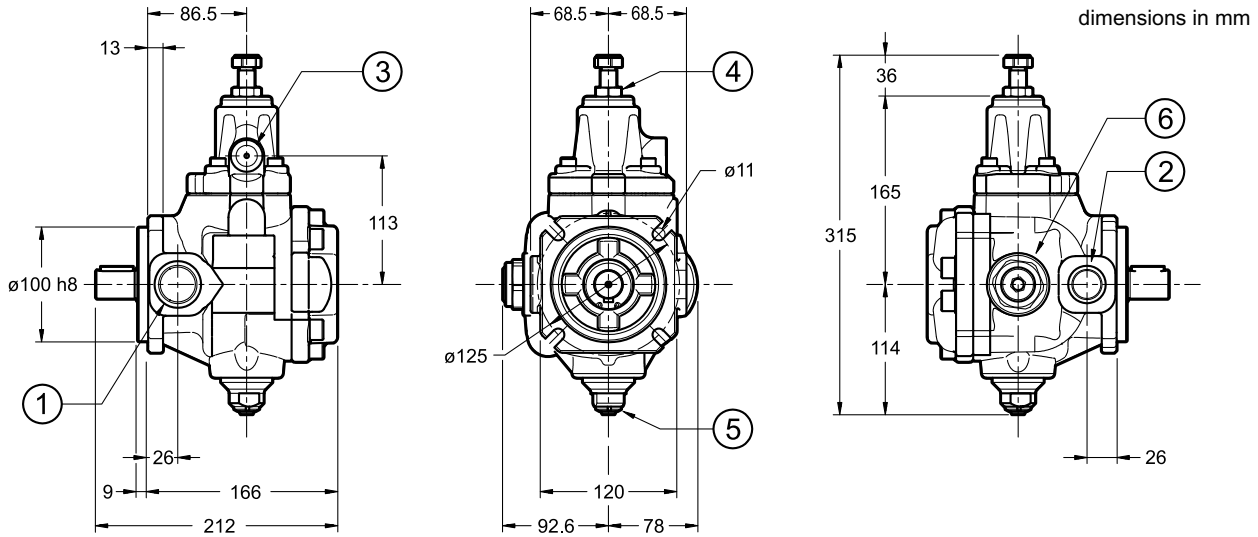


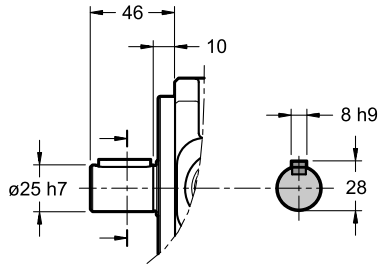


| | |
|---|---|
| 1 | Suction port: 1” BSP |
| 2 | Delivery port: 3/4” BSP |
| 3 | Drainage port: 1/2” BSP |
| 4 | Pressure adjustment screw. Rotate clockwise to increase pressure. Spanner 22. Locking nut : spanner 22. |
| 5 | Flow adjustment screw. Rotate clockwise to decrease flow. Socket hex screw, Hex key 6. Retainer KM1 type. |
| 6 | Guide block balancing adjuster. **Do not tamper.** |

## 9 - OVERALL AND MOUNTING DIMENSIONS RV1D-040, RV1D-050 AND RV1D-063 (GR.2)

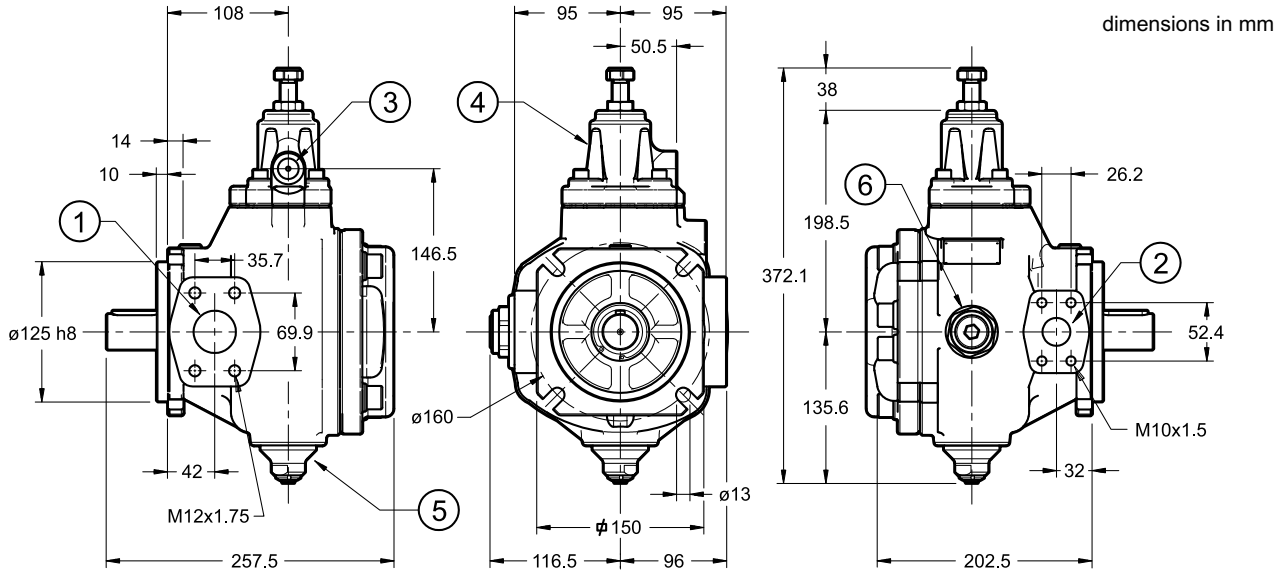


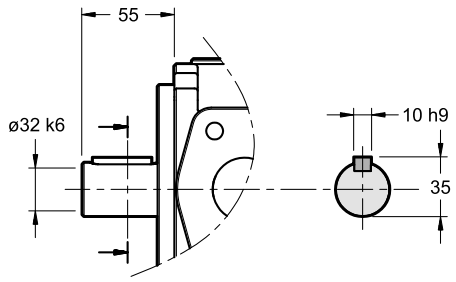


| | |
|---|---|
| 1 | Suction port: SAE 3000 1 1/2” |
| 2 | Delivery port: SAE 3000 1” |
| 3 | Drainage port: 1/2” BSP |
| 4 | Pressure adjustment screw. Rotate clockwise to increase pressure. Spanner 22. Locking nut : spanner 22. |
| 5 | Flow adjustment screw. Rotate clockwise to decrease flow. Socket hex screw, Hex key 6. Retainer KM1 type. |
| 6 | Guide block balancing adjuster. **Do not tamper.** |

## 10 - INSTALLATION

The instruction manual for pumps installation and commissioning is always included in the packaging with the pump. Observe restrictions in this document and follow the instructions.

— RV1D-016, RV1D-020, RV1D-025 and RV1D-032 pumps can be installed in any position.

RV1D-040, RV1D-050 and RV1D-063 pumps need to be installed with the axis in horizontal position and with pressure compensator upward.

— Motor-pump coupling must be made with a self-aligning flexible coupling with convex teeth and a polyamide cam. Couplings that generate axial or radial loads on the pump shaft are not allowed.

— The suction line must be short, with end pipe cut at 45° with a small number of bends and without internal section changes. The minimum section of the inlet pipe must be equal to the section of the thread of the pump inlet port.

The pipe-end inside the tank should be cut at 45°, should have a minimum distance from the tank bottom of not less than 50 mm, and there should always be a minimum height of suction of 100 mm. The suction pipe should be completely airtight in order to avoid air intake which could be extremely damaging to the pump.

**Suction pressure should be between 0.8 and 1.5 bar absolute**

— The drainage pipe must be connected directly to the tank by a line separate from other discharges, located as far as possible from the suction line and lengthened to below the minimum oil level in order to avoid foaming.

**The fluid temperature must not exceed 60 °C**

— The tank must be suitably sized in order to allow the cooling of the fluid. It should be good that the fluid in the tank do not exceed 50°C. If necessary, consider the installation of a heat exchanger on the drain line.

— The pump start up must be done in full displacement (P→T) with flow to the tank with no pressure, to purge the air.
The pump should prime within 5 seconds. If it does not, switch it off and investigate the cause. The pump should not run empty.

— If the volume adjuster has been setfor values less than 50% of the nominal flow-rate, start-up is allowed only if provided the system and pump are fully filled of fluid.

— **It's essential that the difference between the fluid temperature and the ambient (pump body) temperature doesn't exceed 20 °C.**
If this is the case, the pump should be switched-on only for intervals of about 1-2 seconds (start/stop mode) without pressure, until the temperatures came balanced.

— The pumps are usually placed directly upon the oil tank. Flooded suction port installation of the pump is recommended in the event of circuits with high flow rates and pressures.

## 11 - CONNECTION FLANGES

dimensions in mm

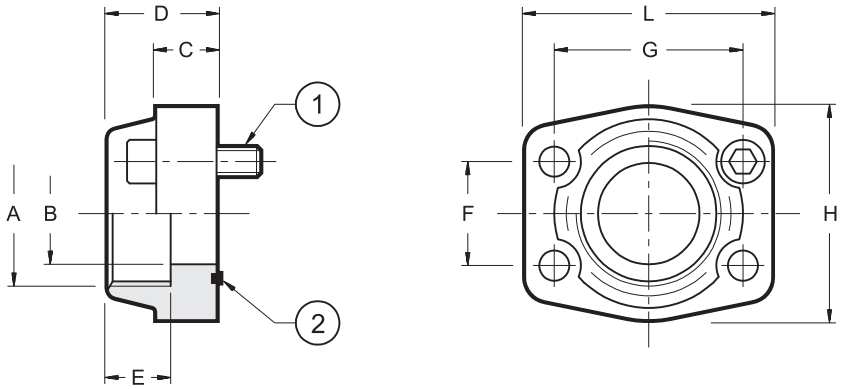


The fastening bolts and the O-Rings must be ordered separately.

| flange code | flange description | $p_{max}$ [bar] | ØA | ØB | C | D | E | F | G | H | L | (1) no. 4 bolts | (2) |
|---|---|---|---|---|---|---|---|---|---|---|---|---|---|
| 0610713 | SAE - 1" | 345 | 1" BSP | 25 | 18 | 38 | 22 | 26.2 | 52.4 | 22 | 70 | SHC M10x35 | OR 4131 (32.93x3.53) |
| 0610714 | SAE - 1 1/2" | 207 | 1 1/2" BSP | 38 | 25 | 44 | 24 | 35.7 | 70 | 78 | 93 | SHC M12x45 | OR 4187 (47.22x3.53) |

## 12 - MULTIPLE PUMPS

RV1D pumps are designed to be connected one to the other in decreasing order of displacement. The RV1D-016 pump suitable for multiple pumps is the R55B version only (ISO 3019-2 four-bolt flange with cylindrical keyed shaft end)

RV1D pumps can be coupled also with RV1P type pumps (see catalogue 14 201) and with GP gear pumps (see catalogue 11 100). The torque on the shaft must be further reduced after the second pump.

Consult our sales support department for this kind of applications.

**IDENTIFICATION CODE FOR MULTIPLE PUMPS**
Fill the ordering code, following the coupling sequence of the pumps. Insert the suffix that shows the pump position at the end of each RV1D pump identification code.

/ pump location:
**/A** = Front
**/I** = Intermediate
**/P** = Rear

identification code 1st pump + identification code 2nd pump + identification code 3rd pump (omit for single pumps)

Double pump identification example: RV1D-016PC-R55B/10V **/A +** RV1D-016PC-R55B/10V **/P**
Triple pump identification example: RV1D-025PC-R55B/10N**/A +** RV1D-025PC-R55B/10N **/I +** RV1D-025PC-R55B/10N **/P**
RV1D pump + gear pump identification example: RV1D-050PC-R55B/10N **/A +** GP2- 00208R97F/20N

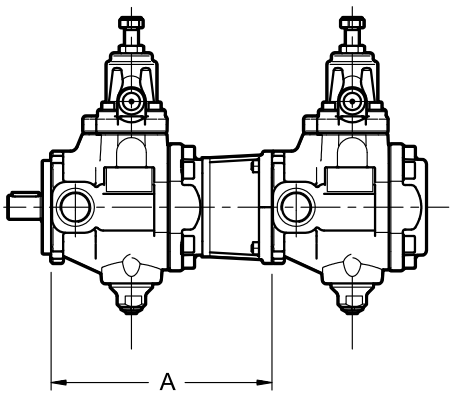


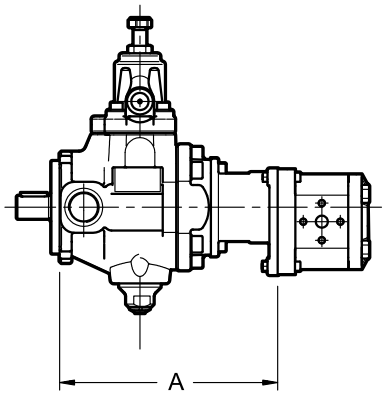


| Max. torque applied to the shaft of the second pump (Nm) | | |
|---|---|---|
| size group Primary pump | Second pump (same size group) | Second pump (smaller size group) |
| Group 05 | 55 | - |
| Group 1 | 55 | 55 |
| Group 2 | 110 | 110 |

| dimension A (mm) | |
|---|---|
| with RV1D pump (same size group) | With gear pump type GP1 / GP2 / GP3 |
| 177 | 168 / 176 / - |
| 238 | 227 / 235 / - |
| 307,5 | 263,5 / 271,5 / 274,5 |

DUPLOMATIC MOTION SOLUTIONS
DUPLOMATIC MS S.p.A.
via M. Re Depaolini 24 ▪ 20015 PARABIAGO (MI) ▪ ITALY
tel. +39 0331.895.111 ▪ www.duplomatic.com ▪ e-mail: sales.exp@duplomatic.com