Double Thru-drive Pump Operating Specifications

Model Series	Displacement Code (USgpm at 1200 r/min and 7 bar (100 psi)		Displacement cm^3/rev (in^3/rev)	Rated Speed r/min	Maximum Pressure bar (psi)	Typical Delivery at Max Speed and Pressure l/min (USgpm)	Typical Input Power at Maximum Speed and Pressure kW (hp)
	Front Pump	**Rear Pump**					
	25		81,6 (4.98)	2500	207 (3000)	173,1 (45)	75 (101)
	30		97,7 (5.96)	2500	207 (3000)	211,5 (55)	88 (117.5)
	35		112,8 (6.88)	2400	207 (3000)	230,8 (60)	98 (132)
3525VQT	38		121,6 (7.42)	2400	207 (3000)	250,0 (65)	104 (140)
		12	40,2 (2.45)	2500	207 (3000)	79,0 (21)	38 (51)
		14	45,4 (2.77)	2500	207 (3000)	91,0 (24)	43 (58)
		17	55,2 (3.37)	2500	207 (3000)	119,2 (31)	51,8 (69,5)
		21	67,5 (4.12)	2500	207 (3000)	146,2 (38)	62 (83)
	42		138,7 (8.46)	2200	172 (2500)	255,8 (66.5)	91 (122.5)
	50		162,3 (9.90)	2200	172 (2500	303,8 (79)	105 (141)
	60		193,4 (11.80)	2200	172 (2500)	369,2 (96)	127 (170)
4525VQT		12	40,2 (2.45)	2200	207 (3000)	68,0 (18)	33 (44)
		14	45,4 (2.77)	2200	207 (3000)	79,0 (21)	38 (51)
		17	55,2 (3,37)	2200	207 (3000)	100,0 (26.5)	45 (61)
		21	67,5 (4.12)	2200	207 (3000)	125,0 (33)	54 (73)

Performance constants: SAE 10W oil @ 82C (180F) and pump inlet @ 0 psig (14.7 psia).

Note: Outlet pressure must always be higher than inlet pressure. See page 8 for details.

Typical Performance

For thru-drive performance, use curves on the following pages:

Model Series	Page Number	
	Shaft-end Pump	**Rear Pump**
3525VQT	35	39
4525VQT	36	41

Model Codes

Thru-drive Double Pump

(F3) – **25 VQT * S – ** A * ** (S) – 2 297 ** (*) – 20 *

1 2 3 4 5 6 7 8 9 10 11 12 13 14

1 F3 - Viton seals
Omit if not required.

2 Series designation
3525VQT (standard bearing)
3625VQT (3525VQT with heavy duty bearing)
4525VQT (standard bearing)

3 Thru-drive (rear) 2-bolt mounting flange
A – SAE "A" flange
B – SAE "B" adapter flange
BP – SAE "B" spacer flange for Vickers PVE12, 19, or 21 pump

4 Front mounting flange
S – SAE J-744 (127-2)

5 Geometric displacement, shaft end pump
Code = SAE rating (USgpm) at 1200 rpm and 6,9 bar (100 psi)

Pump Series	Code	cm³/r	in³/r
3*25VQT	25	81,6	4.98
	30	97,7	5.96
	35	112,8	6.88
	38	121,6	7.42
4525VQT	42	138,7	8.46
	50	162,3	9.90
	60	193,4	11.80

6 Port connections
A – SAE 4-bolt flange
B – Metric 4-bolt flange (Flange pads stamped "M" for metric threads)

7 Geometric displacement, cover end pump
Code = SAE rating (USgpm) at 1200 rpm and 6,9 bar (100 psi)

Pump Series	Code	cm³/r	(in³/r)
**25VQT	12	40	2.45
	14	45	2.77
	17	55	3.37
	21	68	4.12

8 Shaft seal assembly
S – Single seal
– Omit for double seal

9 Thru-drive coupling
2 – With spline for tandem pump

10 Shaft
297 – Splined
"C" size per SAE J744C
32-4 per SAE J744 Oct '83

11 Port position
(Viewed from cover end of pump)

With no. 1 outlet opposite inlet
AA – No. 2 outlet 135° CCW from inlet
AB – No. 2 outlet 45° CCW from inlet
AC – No. 2 outlet 45° CW from inlet
AD – No. 2 outlet 135° CW from inlet

With no. 1 outlet 90° CCW from inlet
BA – No. 2 outlet 135° CCW from inlet
BB – No. 2 outlet 45° CCW from inlet
BC – No. 2 outlet 45° CW from inlet
BD – No. 2 outlet 135° CW from inlet

With no. 1 outlet in line with inlet
CA – No. 2 outlet 135° CCW from inlet
CB – No. 2 outlet 45° CCW from inlet
CC – No. 2 outlet 45° CW from inlet
CD – No. 2 outlet 135° CW from inlet

With no. 1 outlet 90° CCW from inlet
DA – No. 2 outlet 135° CCW from inlet
DB – No. 2 outlet 45° CCW from inlet
DC – No. 2 outlet 45° CW from inlet
DD – No. 2 outlet 135° CW from inlet

12 Thru-drive (rear) mounting flange position
(Viewed from cover end of pump)
A – In line with no. 2 outlet port in all cases
B – 90° from no. 2 outlet port in all cases
– Omit for **25VQTA models

13 Design
Subject to change. Installation dimensions remain unchanged for designs 20 through 29.

14 Shaft rotation
(Viewed from shaft end of pump)
L – Left hand (counterclockwise)
R – Right hand (clockwise)

NOTE:

State complete model number when ordering. Example: 3525VQTAS-25A12-2297CC-20R. Port flange kits with inch screws are available from Vickers and must be ordered separately. For port flange kits, or mounting, displacement, port, and shaft options other than coded above, contact your Vickers representative.

Installation Dimensions

3525VQT Series
Dimensions in millimeters (inches)

Port connection pads are for use with SAE or metric 4-bolt flanges. Pads stamped with "M" for metric threads. See page 121 for selection of SAE flanges.

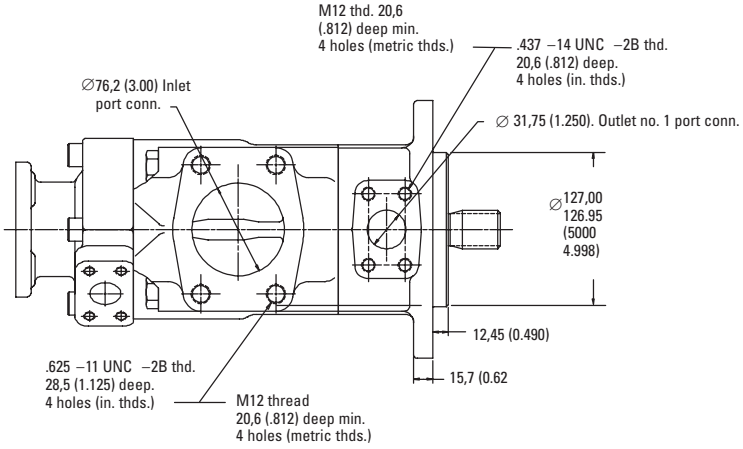

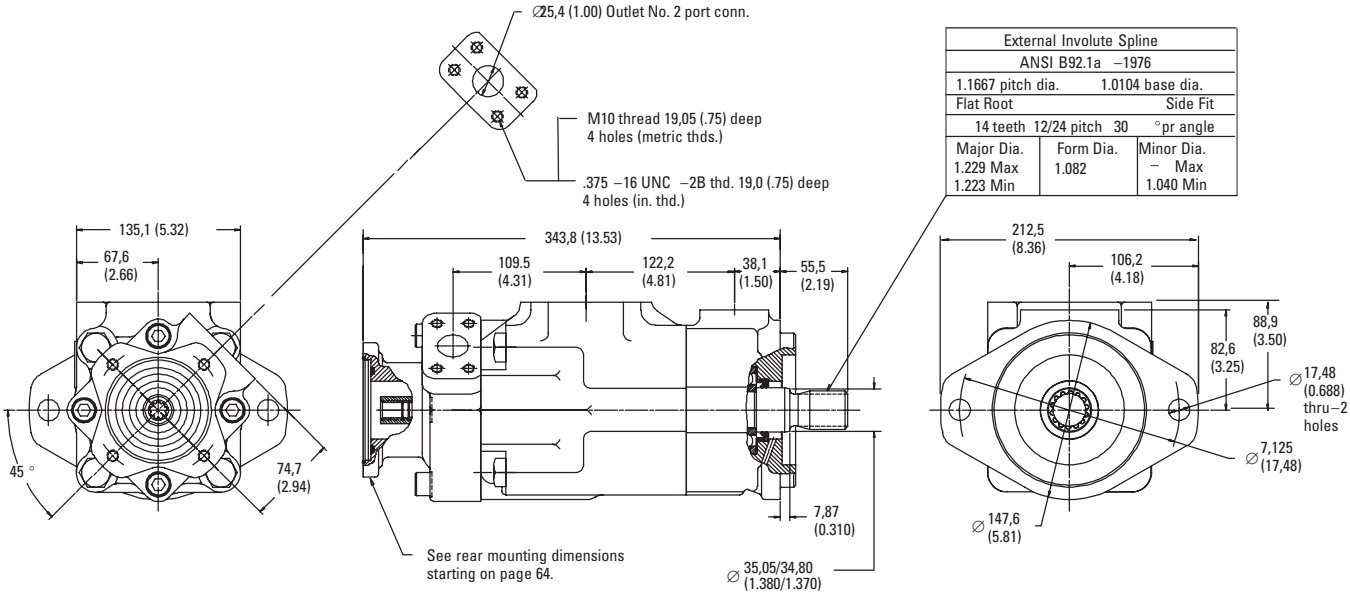

External Involute Spline		
ANSI B92.1a –1976		
1.1667 pitch dia.	1.0104 base dia.	
Flat Root		Side Fit
14 teeth 12/24 pitch 30 °pr angle		
Major Dia. 1.229 Max 1.223 Min	Form Dia. 1.082	Minor Dia. – Max 1.040 Min

Installation Dimensions

4525VQT Series
Dimensions in millimeters (inches)

Port connection pads are for use with SAE or metric 4-bolt flanges. Pads stamped with "M" for metric threads. See page 121 for selection of SAE flanges.

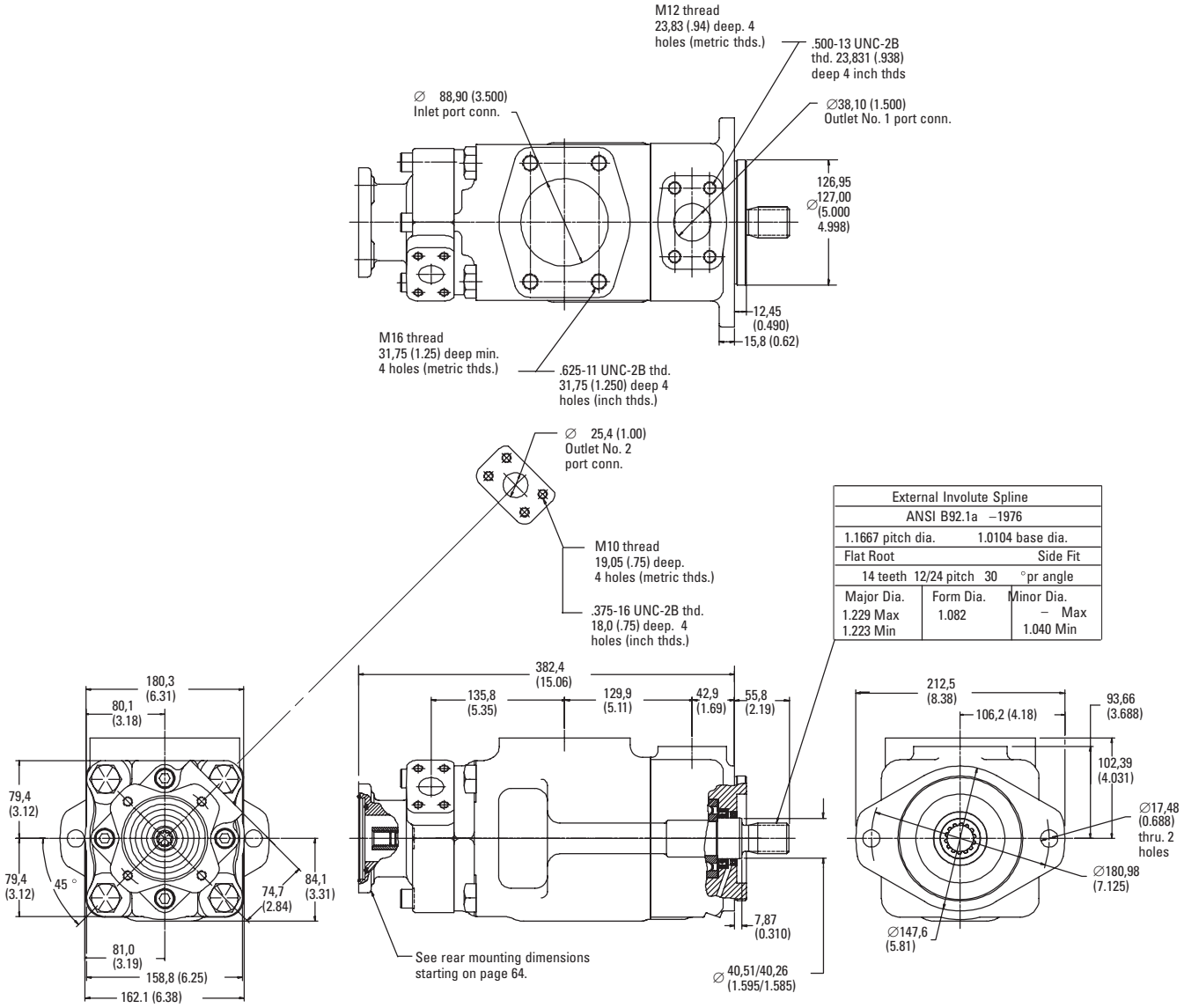

Rear Mountings for Thru-drive Double Pumps

"A" Rear Mounting
(SAE 82–2 size).

Dimensions in millimeters (inches)

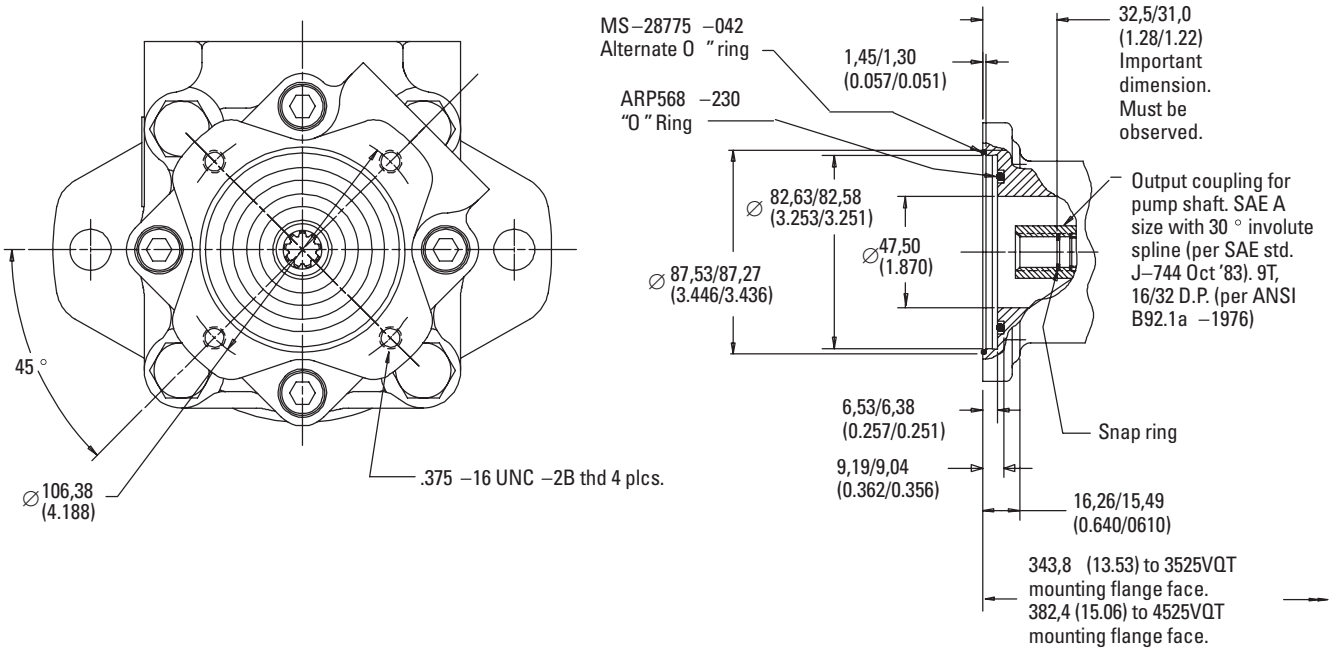

"B" Rear Mounting
(SAE 101–2 size).

Dimensions in millimeters (inches)

This unit accepts hydraulic pump with SAE mounting configuration of 101–2(B) size per SAE std. J–744 Oct '83.

NOTE: Concentricity of shaft of attached product must be to SAE std. J–744 Oct.'83 or better.

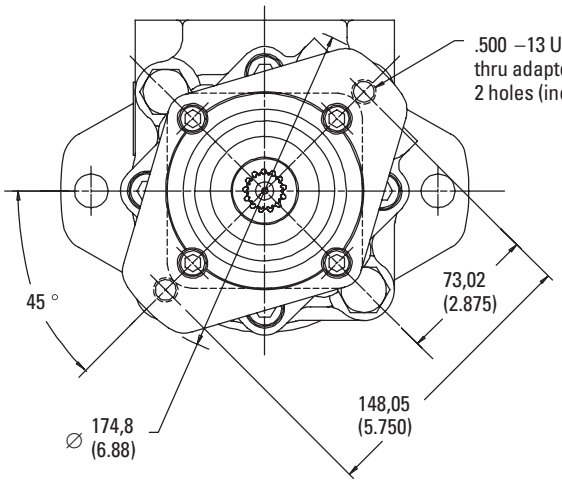

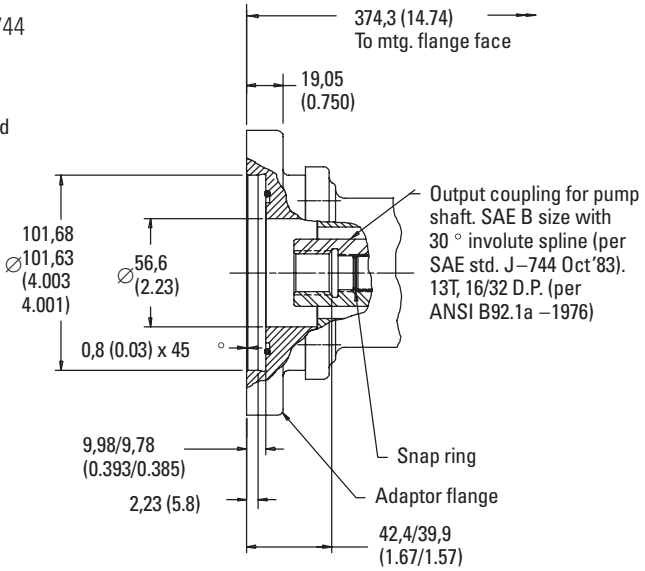

Rear Mountings for Thru-drive Double Pumps

"BP" Rear Mounting
(SAE B size with spacer for Vickers PVE19/21 pumps)
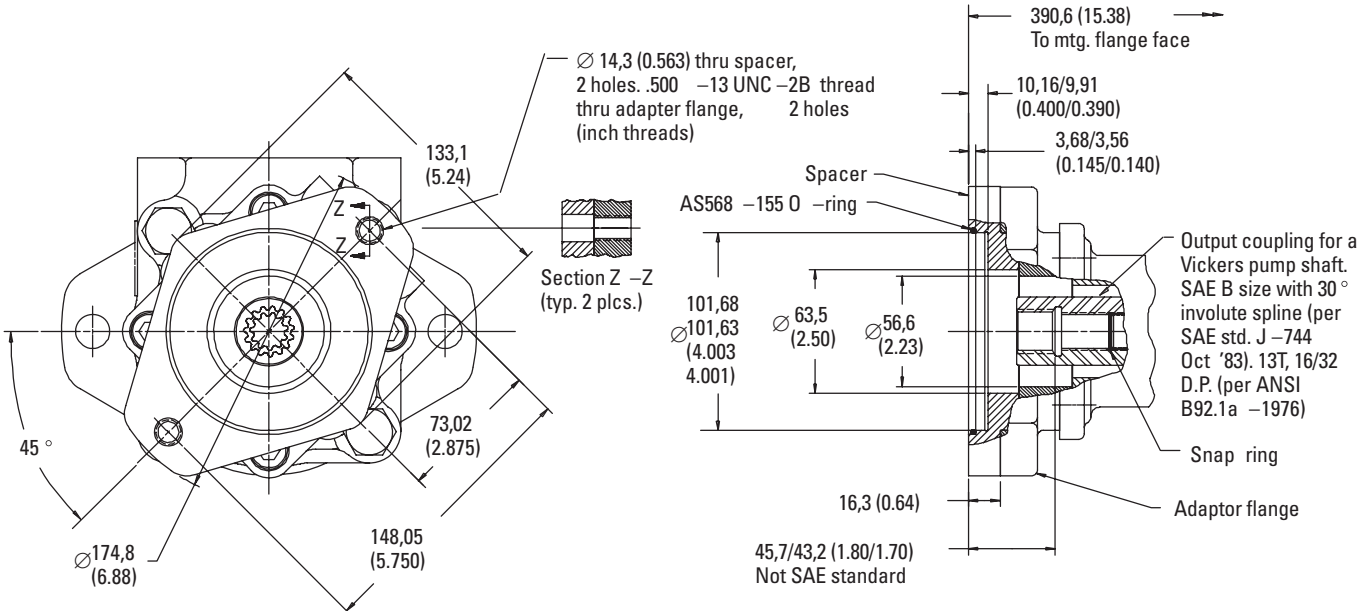
Dimensions in millimeters (inches)