RE 20 478/02.03

Replaces: 05.00

Pre-fill valve – sandwich plate
Types ZSF and ZSFW

Nominal sizes 32 to 160

Series 1X

Maximum operating pressure 350 bar

H/A 3520/92

Type ZSF 40 F.-1-1X/...

H/AD 5858/97

Type ZSFW 100 F.-1-1X/... with built-on directional valve (separate order)

Overview of contents

Features

- Hydraulic pilot operated check valve of sandwich plate design
  - For flange connections
  - For line mounting
- With or without decompression
- Integrated high pressure connection
- Solenoid operated decompression via a built-on directional valve

- Further information:
  Directional valve with high performance solenoid RE 23 178

Ordering details

ZSF | | | F | – 1 – 1X / M / 01 | *

For directional valve mounting [1] **= W**

Nominal size

Nominal size 32	**= 32**
Nominal size 40	**= 40**
Nominal size 50	**= 50**
Nominal size 63	**= 63**
Nominal size 80	**= 80**
Nominal size 100	**= 100**
Nominal size 125	**= 125**
Nominal size 160	**= 160**

Connection type

For flange connection **= F**

With decompression **= 1**

Without decompression **= 0**

Further details in clear text

Connection type

01 = Threaded ports with pipe thread to DIN ISO 228, DIN 3852 part 2

M = NBR seals (other seals on request)

⚠ Attention!
The compatibility of the seals and pressure fluid has to be taken into account!

1X = Series 10 to 19
(series 10 to 19: unchanged installation and connection dimensions)

Spring return of main poppet

1 = Opening pressure ≈ 0.12 bar

[1] Ordering details only necessaray for type with built-on directional valve „W“.
The directional valve type 4WE 6 D… is **not** included within the scope of supply and must be ordered separately, see catalogue sheet RE 23 178.

Preferred types (readily available)

Type	Material number
ZSF 32 F0-1-1X/M/01	**R900574729**
ZSF 40 F0-1-1X/M/01	**R900521903**
ZSF 50 F0-1-1X/M/01	**R900533756**
ZSF 63 F0-1-1X/M/01	**R900536691**
ZSF 80 F0-1-1X/M/01	**R900533689**
ZSF 100 F1-1-1X/M/01	**R900529340**
ZSF 125 F1-1-1X/M/01	**R900534689**
ZSF 160 F1-1-1X/M/01	**R900566826**

Type	Material number
ZSFW 50 F0-1-1X/M/01	**R900565076**
ZSFW 63 F0-1-1X/M/01	**R900563987**
ZSFW 80 F0-1-1X/M/01	**R900536754**
ZSFW 100 F1-1-1X/M/01	**R900532516**
ZSFW 125 F1-1-1X/M/01	**R900537420**
ZSFW 160 F1-1-1X/M/01	**R900567946**

Further preferred types and standard components are shown in the EPS (standard price list).

Symbols

Pre-fill valve without directional valve type ZSF

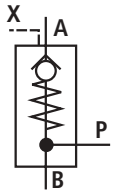

Pre-fill valve with built-on directional valve type ZSFW

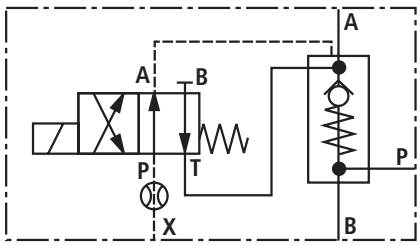

Function, section

The valve type ZSF is a hydraulic pilot operated check valve of sandwich plate design. It is used for leak-free isolation of pressurised working circuits (e.g. press cylinder). Due to its good flow characteristics and the relatively low closing force of the main poppet compression spring (5) the valve is ideally suited for anti-cavitation functions and the pre-filling, e.g. the main cylinders on a press during fast closing movements. The integrated pressure port P permits the build-up of high pressure in the press cylinder!

The valve basically consists of the housing (1), control spool (2), main poppet (3), pilot poppet (4) and compression springs (5) and (6).

Version without decompression

In the valve free-flow occurs from A to B. In the opposite direction the main poppet (3) is held on its seat by spring (5) and the pressure acting on port B. When control port X is pressurised, the control spool (2) is forced down against the spring (6) and moves the main poppet (3) from its seat. The valve now also has free-flow in the opposite direction.

Version with decompression

The function of this version is basically the same as the version without decompression.

When control port X is pressurised the control spool (2) at first only opens the pilot poppet (4) releasing the trapped fluid. Shock-free opening of the main valve is thus achieved.

Version without directional valve, type ZSF…

An orifice (8) has to be fitted in the P port of the directional valve. The orifice Ø is dependent on the nominal size of the pre-fill valve.

Version with directional valve, type ZSFW…

The function of this valve is basically the same as the type ZSF. The unloading of the pilot piston (2) is achieved by actuating the directional valve (7).

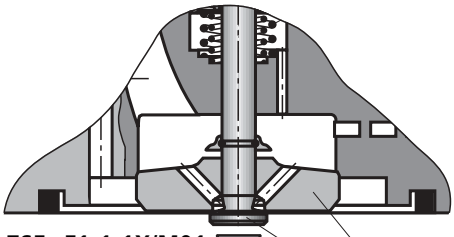

Type ZSF...F1-1-1X/M01
(**with** decompression)

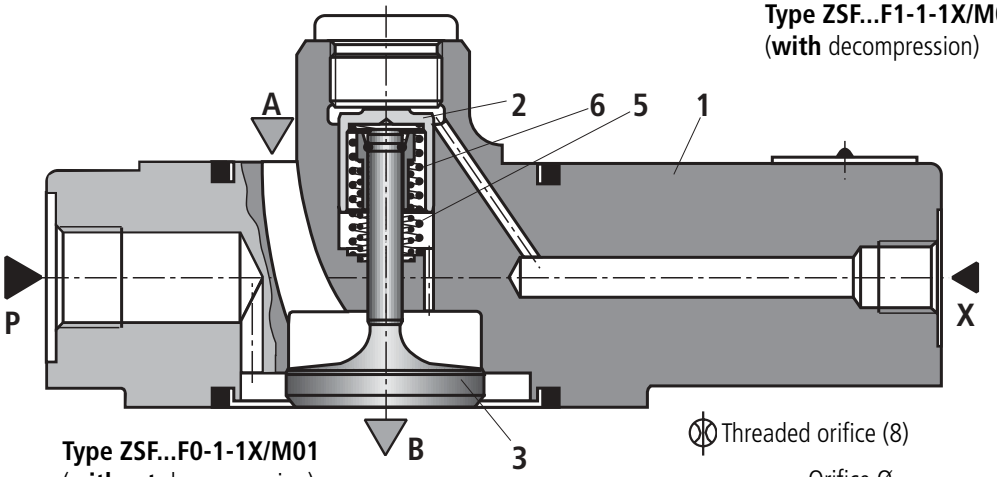

Type ZSF...F0-1-1X/M01
(**without** decompression)

Threaded orifice (8)

	Orifice Ø
NS 32	0.8 mm
NS 40	0.8 mm
NS 50	0.8 mm
NS 63	0.8 mm
NS 80	1.0 mm
NS 100	1.0 mm
NS 125	1.2 mm
NS 160	1.5 mm

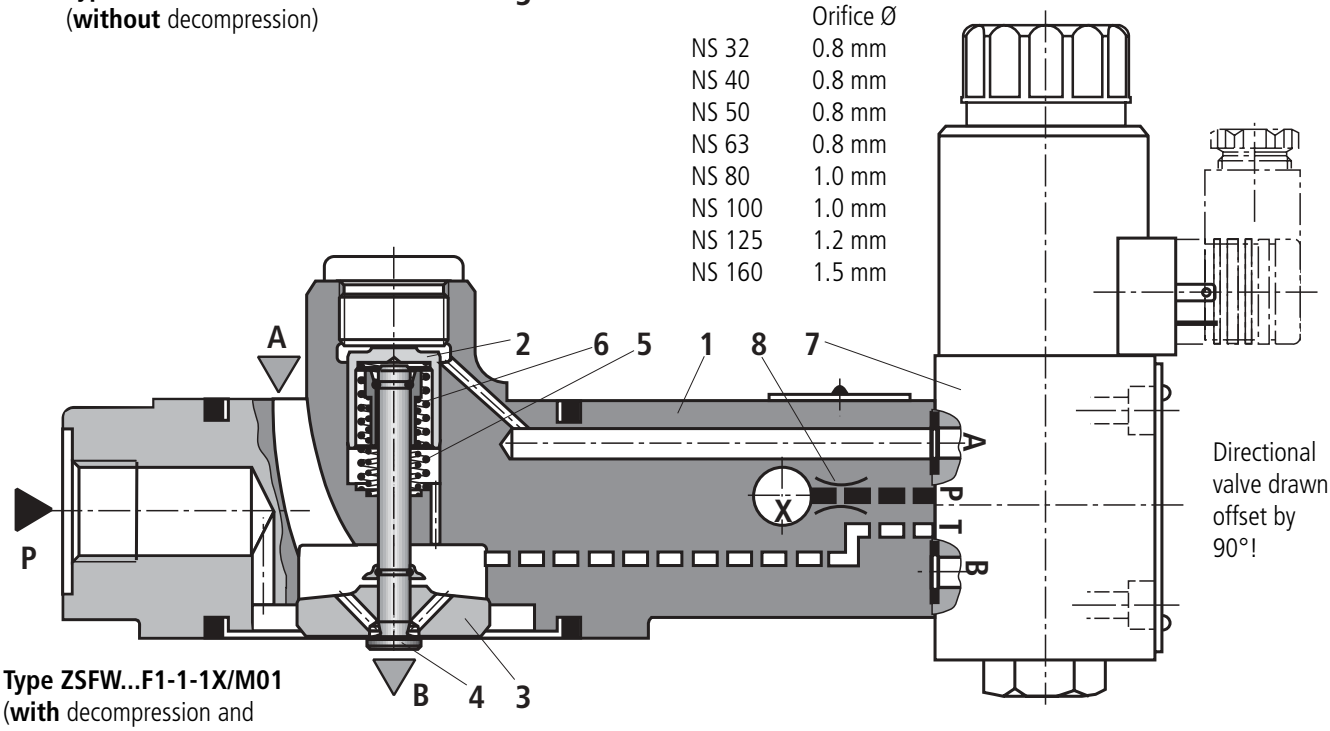

Type ZSFW...F1-1-1X/M01
(**with** decompression and built-on directional valve)

Technical data (for applications outside these parameters, please consult us!)

General

Nominal size		NG	32	40	50	63	80	100	125	160
Weight		kg	3.5	4.2	5.5	7	10	15	26	47
Installation			Optional							Vertical
Ambient temperature range		°C	– 30 to + 80 (NBR seals, without directional valve)							
			– 30 to + 50 (NBR seals, with directional valve)							

Hydraulic

Maximum operating pressure	Ports B, P	bar	350
	Port X	bar	150
	Port A	bar	16
Opening pressure [1]		bar	≈ 0.12
Maximum flow		L/min	See application cases on page 9
Pressure fluid			Mineral oil (HL, HLP) to DIN 51 524 [2]; Fast bio-degradable pressure fluids to VDMA 24 568 (also see RE 90 221); HETG (rape seed oil) [2]; HEPG (polyglycols) [3]; HEES (synthetic ester) [3]; Other pressure fluids on request
Pressure fluid temperature range		°C	– 30 to + 80
Viscosity range		mm^2/s	10 to 800
Cleanliness class to ISO code			Maximum permissible degree of contamination of the pressure fluid is to ISO 4406 (C) class 20/18/15 [4]
Directional valve characteristics			See catalogue sheet RE 23 178

[1] Pressure differential at main poppet for overcoming the spring force

[2] Suitable for NBR **and** FKM seals

[3] **Only** suitable for FKM seals

[4] The cleanliness class stated for the components must be adhered too in hydraulic systems. Effective filtration prevents faults from occurring and at the same time increases the component service life.
For the selection of filters see catalogue sheets RE 50 070, RE 50 076 and RE 50 081.

Calculation of the required control pressure for opening

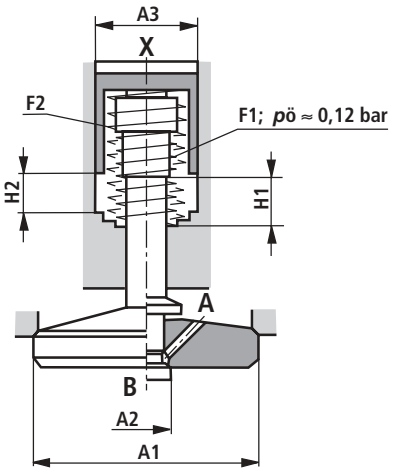

Without decompression | **With** decompression

A1 = Effective area of the main poppet
A2 = Effective area of the pilot poppet
A3 = Effective area of the control spool
H1 = Stroke of the main poppet
H2 = Stroke of the pilot piston
F1 = Spring force of the valve spring
F2 = Spring force of the pilot piston compression spring
V_{st} = Control volume for opening the valve

[4] Omitted with type "without decompression" (ordering detail ZSF...**0**...)

NS	A1 in cm^2	A2 [4] in cm^2	A3 in cm^2	H1 in mm	H2 in mm	F1 in daN	F2 in daN	V_{st} in cm^3
32	8.04	0.5	2.01	8.5	6.5	0.9 to 2.2	5.8 to 10.9	1.30
40	13.52	0.7853	3.14	10	7	1.4 to 2.9	9.3 to 16.2	2.20
50	21.24	1.13	4.71	12.5	9	2.3 to 4.9	14.9 to 26.1	4.20
63	32.67	1.77	7.07	14.5	11	3.5 to 6.3	20.6 to 34.8	7.80
80	49.02	2.54	10.18	17	13	5.7 to 12.7	31.0 to 57.9	13.20
100	73.13	3.80	15.90	22	16	8.1 to 19.3	47.6 to 95.2	25.45
125	120.76	5.72	28.27	30	22.5	13.5 to 31.9	87.8 to 166.7	59.40
160	196.07	9.08	45.36	40	27	24.1 to 51.6	133.5 to 239.5	122

Characteristic curves (measured with HLP46, ϑ_{oil} = 40 °C ± 5 °C)

Pressure differential Δp between ports A and B in relation to the flow q_V with flow in the suction direction A to B.

Nominal sizes 32, 40 and 50

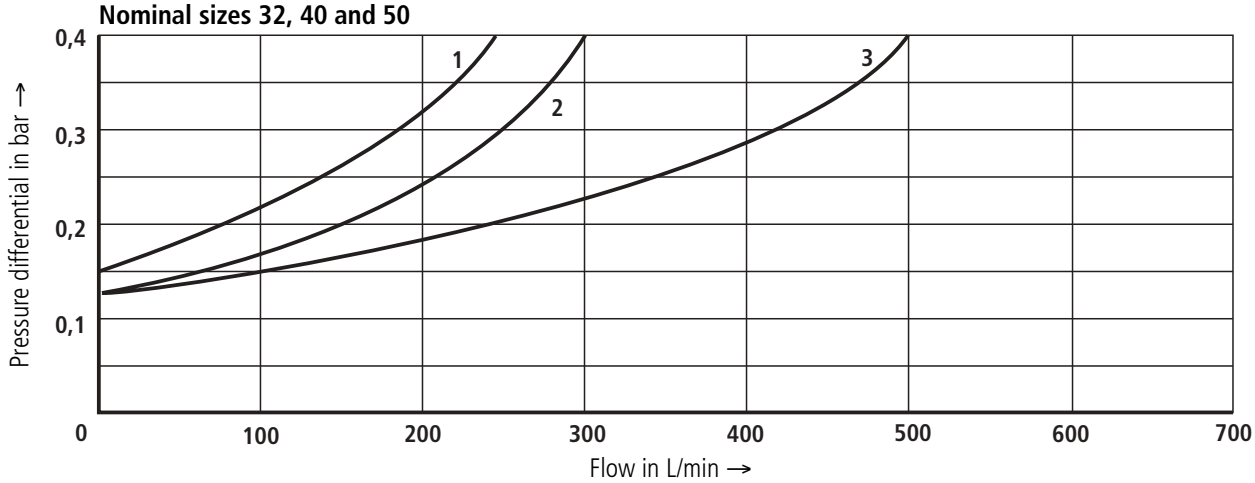

Nominal sizes 63, 80 and 100

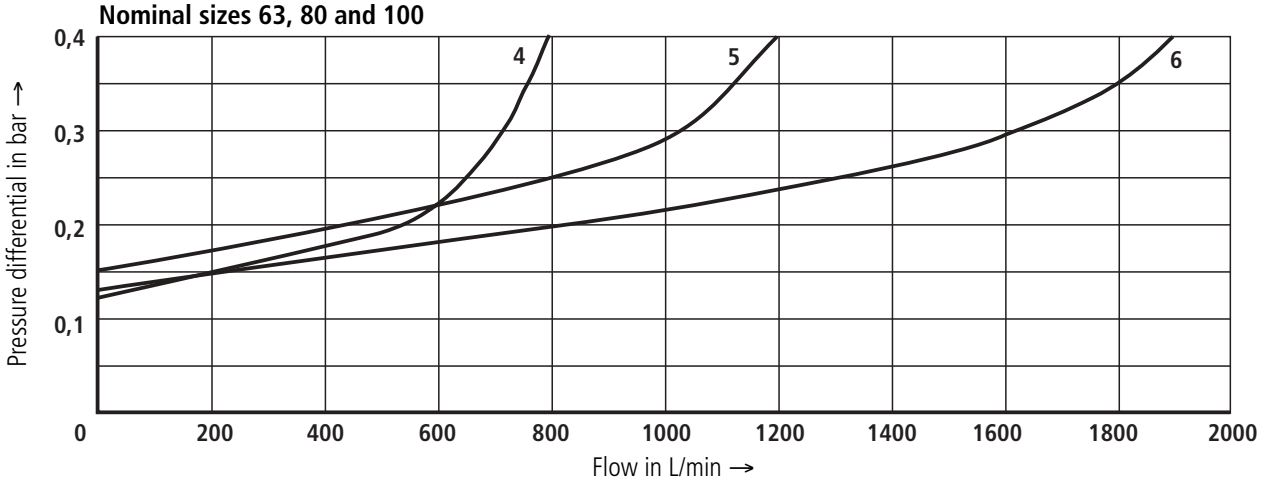

Nominal sizes 125 and 160

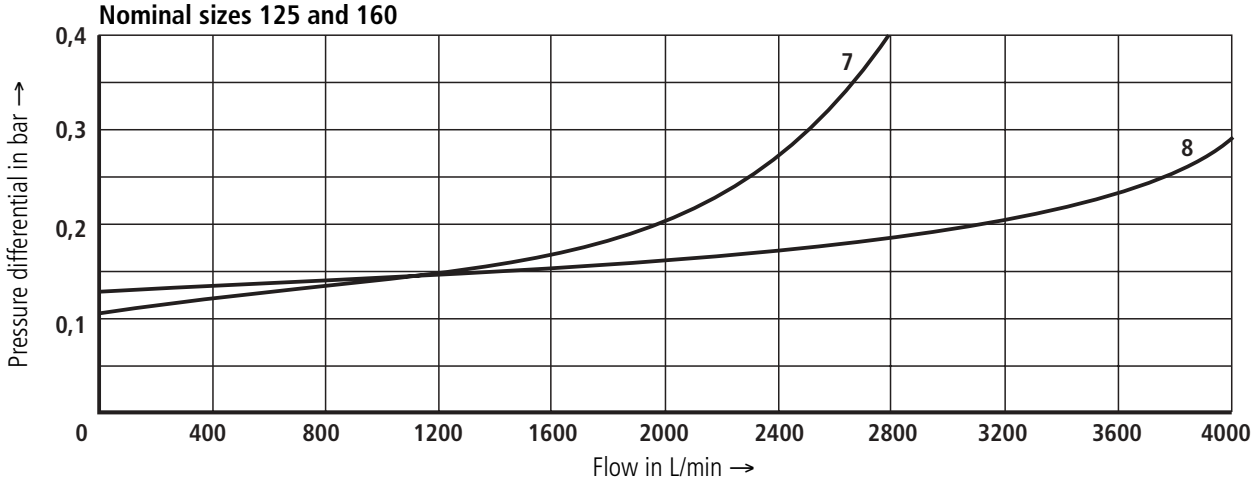

1	NS 32	**5**	NS 80
2	NS 40	**6**	NS 100
3	NS 50	**7**	NS 125
4	NS 63	**8**	NS 160

Unit dimensions: type ZSF… (dimensions in mm)

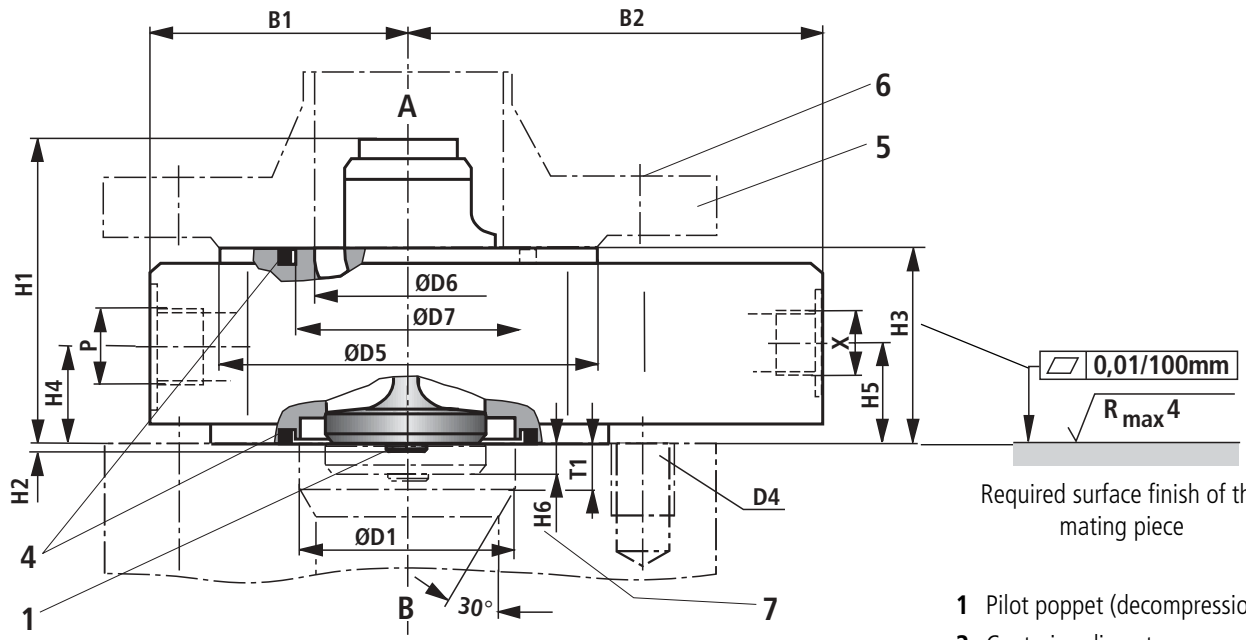

Required surface finish of the mating piece

NS 32 to 125

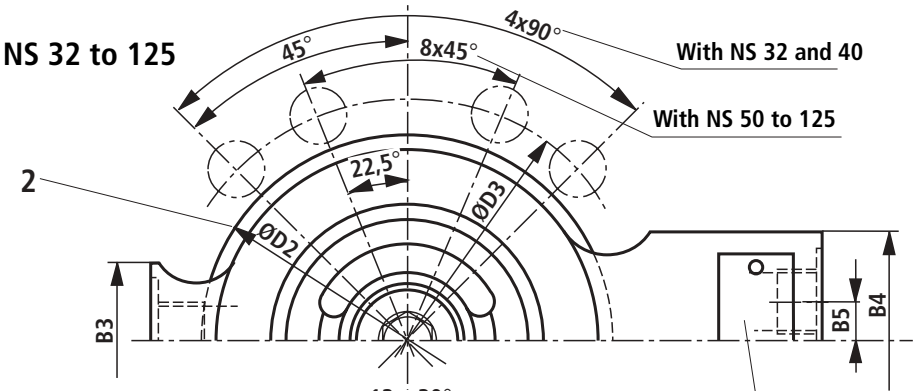

NS 160

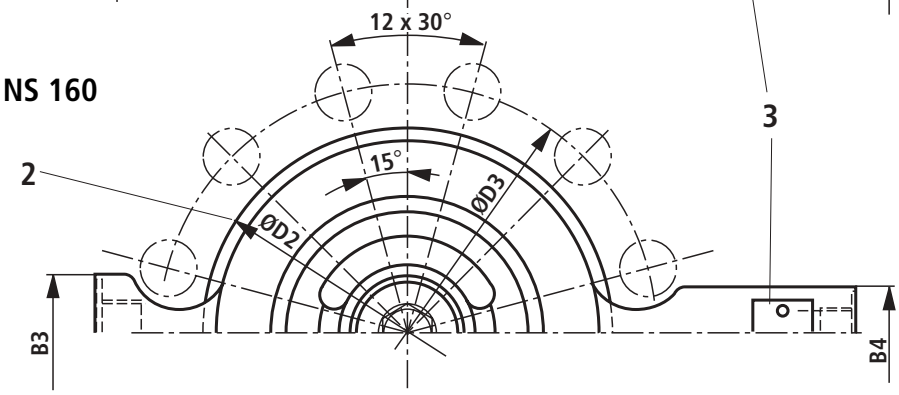

1 Pilot poppet (decompression)
2 Centering diameter
3 Name plate
4 Identical seal rings
5 Connecting flange (not included within the scope of supply – for dimension suggestions, see page 8)
6 Valve fixing screws to DIN 912 – 10,9 (not included within the scope of supply); tightening torque M_A see table on page 8
7 Stroke of the main poppet

NS	B1	B2	B3	B4	B5	ØD1	ØD2	ØD3 ±0.2	D4	ØD5	ØD6	ØD7	H1	H2	H3	H4	H5	H6	P	T1	X
32	65	110	40	55	7.5	46	93	110	M16	88	42	49.5	77	3.5	50	26.5	26.5	8.5	G 1/2	8	G 1/4
40	70	115	40	55	7.5	58	108	125	M16	102	52	61.5	80	3.5	50	26.5	26.5	10	G 1/2	10	G 1/4
50	110	140	40	55	7.5	71	128	145	M16	122	70	75.7	97	4	50	26.5	26.5	12.5	G 1/2	12	G 1/4
63	115	145	45	55	7.5	90	143	160	M16	138	83	97.7	110	4.5	55	27.5	27.5	14.5	G 3/4	14	G 1/4
80	125	160	45	55	7.5	107	169	190	M20	162	100	112	123	5	60	30	30	17	G 3/4	16	G 1/4
100	140	190	55	55	7.5	132	212	240	M27	188	124	138.5	145	6	65	32.5	40	22	G 1	25	G 3/8
125	180	210	65	60	0	170	248	280	M30	218	148	176	215	9	75	37.5	50	30	G 1	33	G 3/8
160	220	255	70	60	0	220	310	345	M33	285	200	233	279	12	95	48.5	68	40	G 1 1/4	55	G 1/2

Unit dimensions: type ZSFW... (dimensions in mm)

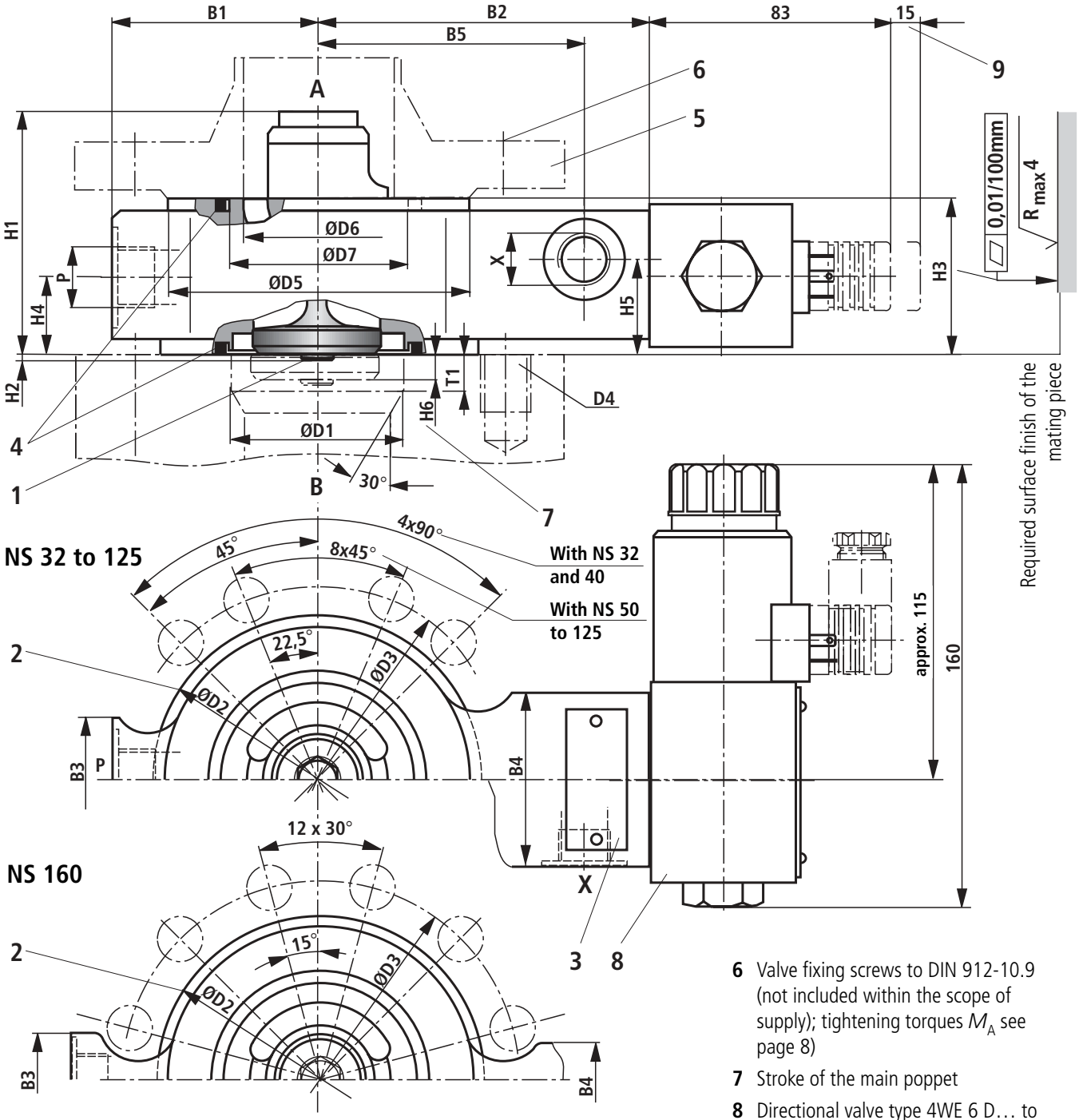

1 Pilot poppet (decompression)

2 Centering diameter

3 Name plate

4 Identical seal rings

5 Connecting flange (not included within the scope of supply; for dimension suggestions see page 8)

6 Valve fixing screws to DIN 912-10.9 (not included within the scope of supply); tightening torques M_A see page 8)

7 Stroke of the main poppet

8 Directional valve type 4WE 6 D… to catalogue sheet RE 23 178 (separate order)

9 Space required to remove the plug-in connector

NS	B1	B2	B3	B4	B5	ØD1	ØD2	ØD3 ±0.2	D4	ØD5	ØD6	ØD7	H1	H2	H3	H4	H5	H6	P	T1	X
32	65	107	40	55	85	46	93	110	M16	88	42	49.5	77	3.5	50	26.5	34	8.5	G 1/2	8	G 1/4
40	70	112	40	55	90	58	108	125	M16	102	52	61.5	80	3.5	50	26.5	34	10	G 1/2	10	G 1/4
50	110	137	40	55	115	71	128	145	M16	122	70	75.7	97	4	50	26.5	34	12.5	G 1/2	12	G 1/4
63	115	142	45	55	120	90	143	160	M16	138	83	97.7	110	4.5	55	27.5	34.5	14.5	G 3/4	14	G 1/4
80	125	157	45	55	135	107	169	190	M20	162	100	112	123	5	60	30	37.5	17	G 3/4	16	G 1/4
100	140	186	55	55	165	132	212	240	M27	188	124	138.5	145	6	65	32.5	40	22	G 1	25	G 3/8
125	180	206	65	60	184	170	248	280	M30	218	148	176	215	9	75	37.5	50	30	G 1	33	G 3/8
160	220	251	70	60	225	220	310	345	M33	285	200	233	279	12	95	48.5	68	40	G 1 1/4	55	G 1/2

Dimension suggestions for the connecting flange (Pos. 5)

Calculation to DIN 2505 / draft

p_{max} **= 350 bar**
Material: C 22

Type of welding seam:
Normal version
s ≤ 16 seam type 22 DIN 2559
s > 16 seam type 3 DIN 2559
Special version
See DIN 2559

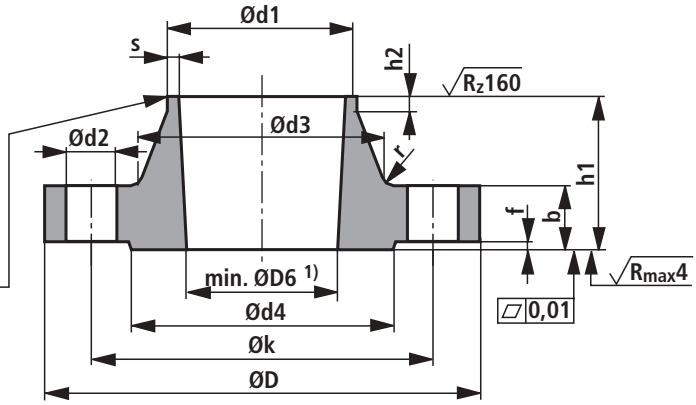

1) See drawing and dimension tables on pages 6 and 7
2) For seamless steel pipes PN16 to DIN 2448

NS	Flange					Flange form				Sealing strip		Screws		
	Ød1 2)	ØD	b	Øk	h1	Ød3	s 2)	r	h2	Ød4	f	Qty.	Thread	Ød2
32	48.3	150	22	110	49	64	3.2	6	7	88	3	4	M16	18
40	60.3	165	29	125	57	75	3.6	6	8	102	3	4	M16	18
50	76.1	185	34	145	64	90	3.6	6	10	122	3	8	M16	18
63	88.9	200	43	160	77	105	3.6	8	12	138	3	8	M16	18
80	114.3	235	51	190	95	134	3.6	8	12	162	3	8	M20	22
100	139.7	295	62	240	116	168	4.0	8	12	188	3	8	M27	30
125	168.3	345	79	280	138	202	4.5	10	12	218	3	8	M30	33
160	219.1	415	118	345	186	256	5.9	10	16	285	3	12	M33	36

Tightening torque of valve fixing screws**, welding flanges**

NS	Tightening torque M_A of valve fixing screws in Nm
32	310
40	310
50	310
63	310
80	620
100	1550
125	2100
160	2800

NS	Welding flanges Material No.
32	R900842693
40	R900825610
50	R900826441
63	R900849622
80	R900862915
100	R900834583
125	R900861508
160	R900846478

Maximum flow q_V in L/min (A to B) for the various applications

NS	32	40	50	63	80	100	125	160
Application 1	200	300	500	800	1200	1900	3000	4200
Application 2	170	250	400	650	1000	1600	2600	3900
Application 3	140	220	360	560	900	1400	2200	3400
Application 4	100	150	240	380	620	950	1500	2300
Application 5	70	110	170	280	450	700	1100	1690

⚠ A pre-fill valve and / or a connection pipe that is dimensioned too small leads to gas diffusion from the pressure fluid with the associated consequences and often leads to long-term damage to the cylinder seals.

Applications

Application 1

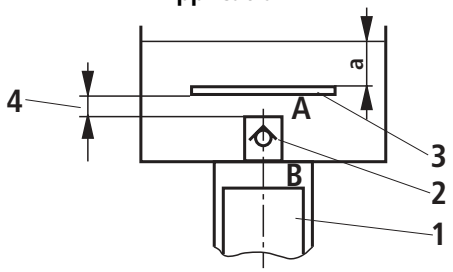

Application 2

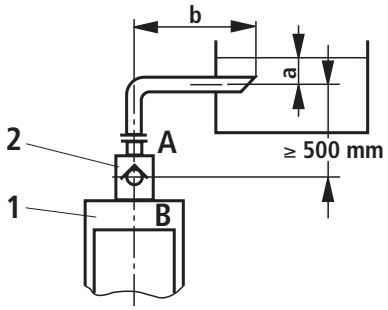

Application 3

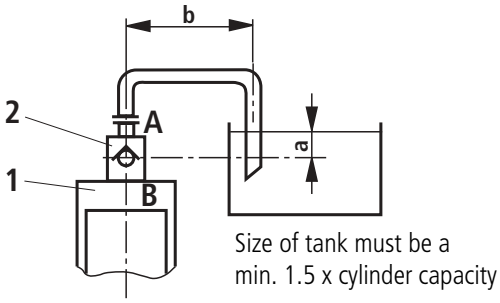

Application 4

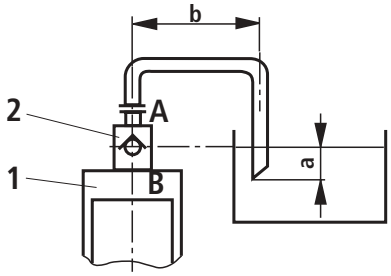

Application 5

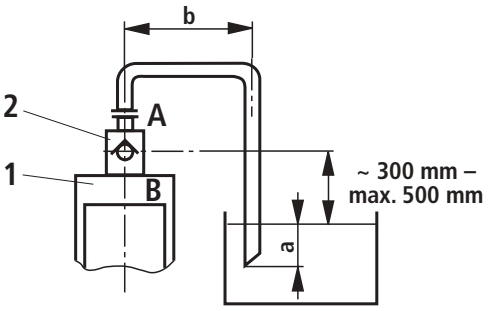

1 Cylinder

2 Pre-fill valve

3 This metal sheet is not included within the scope of supply. Its use avoids the formation of a depressed suction vortex in small tanks and at low oil levels (a).

4 The supply cross-section has to be taken into account!

Dimensions a and b

a = Min. 300 mm when cylinder is extended

b = Up to 1000 mm at the maximum given flow

Note regarding applications 2 to 5

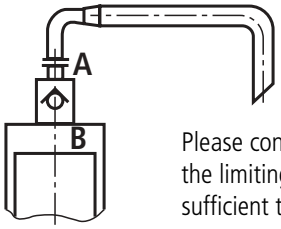

Please consult us when operating close to the limiting parameters. However, it is often sufficient to choose a pipe one size larger.

Notes

Bosch Rexroth AG
Industrial Hydraulics

D-97813 Lohr am Main
Zum Eisengießer 1 • D-97816 Lohr am Main
Telefon 0 93 52 / 18-0
Telefax 0 93 52 / 18-23 58 • Telex 6 89 418-0
eMail documentation@boschrexroth.de
Internet www.boschrexroth.de

Bosch Rexroth Limited

Cromwell Road, St Neots,
Cambs, PE19 2ES
Tel: 0 14 80/22 32 56
Fax: 0 14 80/21 90 52
E-mail: info@boschrexroth.co.uk